SUCO DiamantWerkzeuge
SpitzenQualität aus Berlin

Range

SUCO Diamond Dressing Tools

SUCO MKD and CVD Rotary Dressers

SUCO Tracer Point and Testing Diamonds

SUCO Diamond and PKD Rotary Dressers

SUCO D Diamond Grinding Tools/
SUCO B Boron Nitride Grinding Tools

SUCO Mono-, Polycristalline and Boron Nitride Tools

SUCO Fine Boring Units

SUCO Accessories

SUCO 1
Single-point diamond dressers

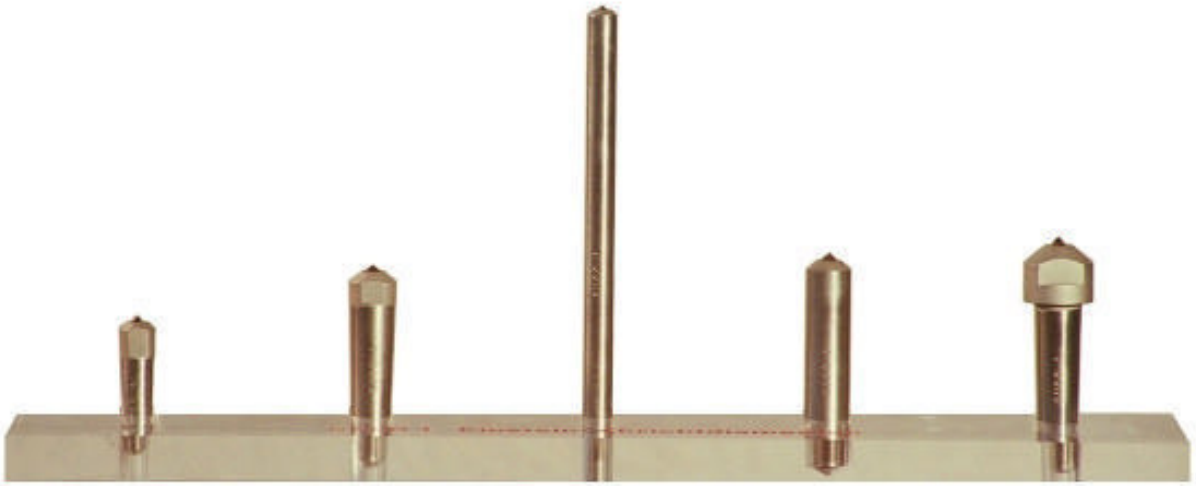

SUCO 1 Single-point diamond dressers

640 MKO DIN 1820 A	**642 MK1 DIN1820 A**	**680 Cylinder D und L, to be specified**	**643 MK1 DIN 1820 B**

Single-point dressing diamonds, non machined

For these dressing tools we use selected natural diamonds. Ideal shapes are octahedrons and rhombic dodecahedrons as well as their variations. Macle diamonds are a special variant with particularly hard edges and three clearly defined points.

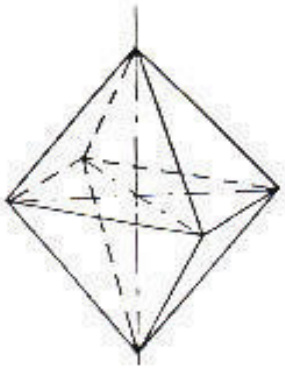

Octahedron

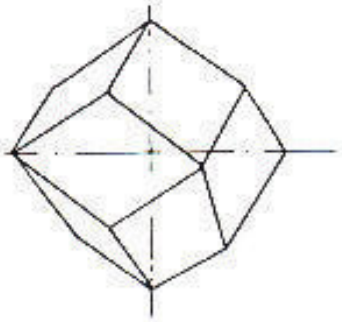

Rhombic dodecahedron

01/1.0

SUCO 1 Single-point dressing diamonds are available in the following qualities:

TOP : Clearly defined, first-class octahedrons with 5 – 6 natural points, without internal fissures and detrimental inclusions.

SUPER : Slightly round octahedrons with 4 – 5 natural points, without internal fissures and detrimental inclusions.

EXTRA : Octahedrons with 3 – 4 natural points and minor fissures and flaws.

STANDARD: Intergrown octahedrons with 1 – 2 natural points, with slight impurities; also available with pointed finish.

Selection of the diamond size in carats 1 carat = 0.2 g

(r + T) x 0.004 = carat

(radius + grinding wheel depth) x 0.004 = diamond size in carats

or refer to table below.

Carat sizes available	**Qualities: TOP – SUPER – EXTRA – STANDARD**
0.25 **0.33** **0.40** **0.50** **0.60** **0.70** **0.80** **1.00** **1.25** **1.50** **1.75** ***Sizes exceeding 2 carats available on request!***	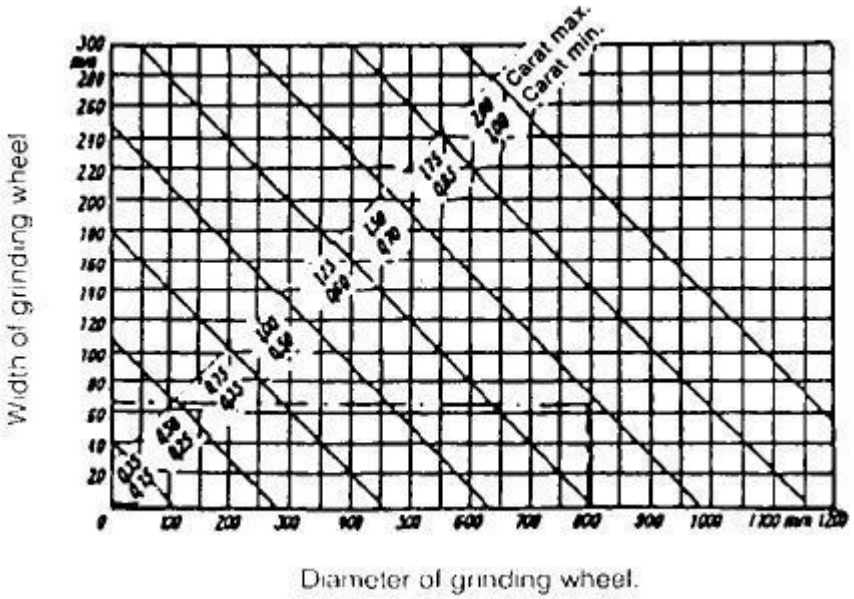

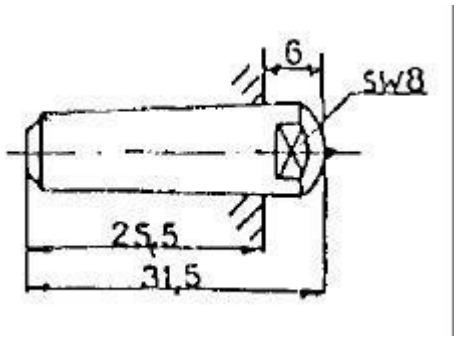

640 MK0 DIN 1820 A

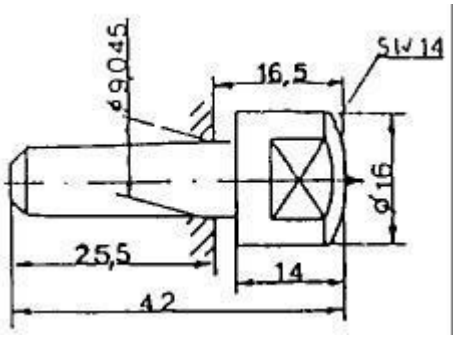

641 MK0 DIN 1820 B

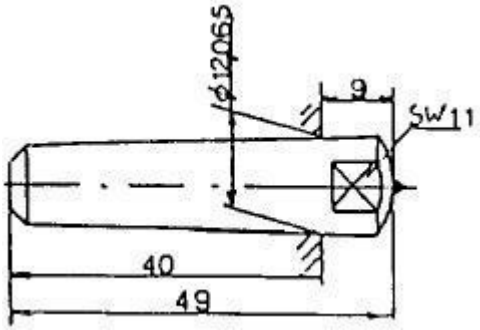

642 MK1 DIN 1820 A

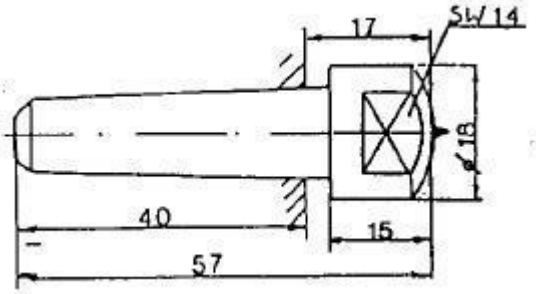

643 MK1 DIN 1820 B

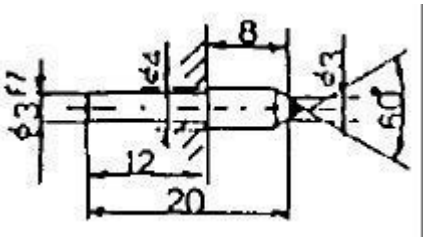

644 DIN 1820 C

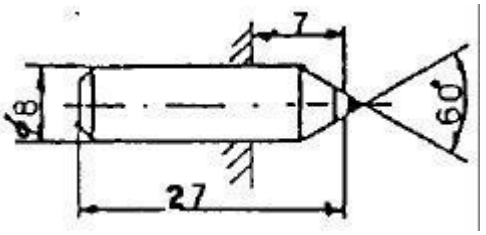

645 DIN 1820 D

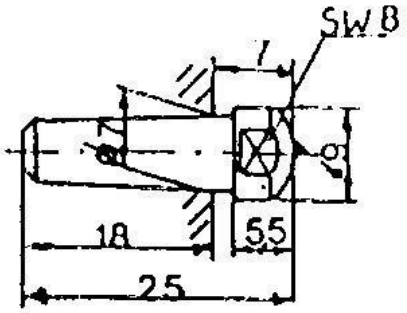

650 MK0 DIN 1820 E

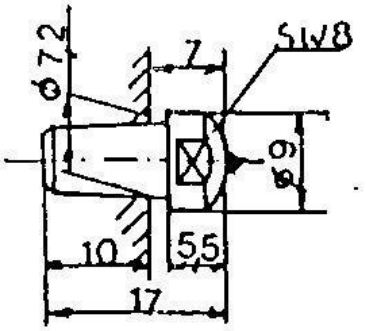

651 Jung NT 65

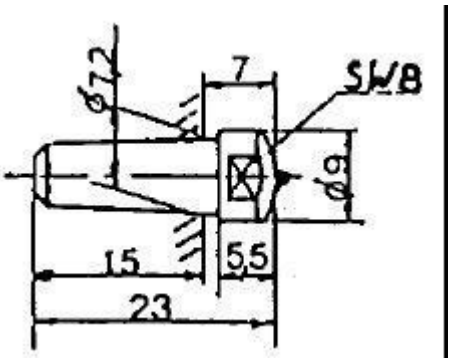

652 Jung 1751

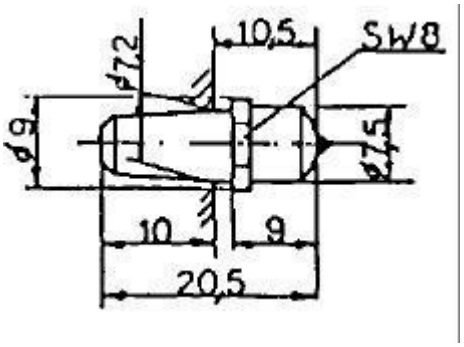

653 Jung C 8

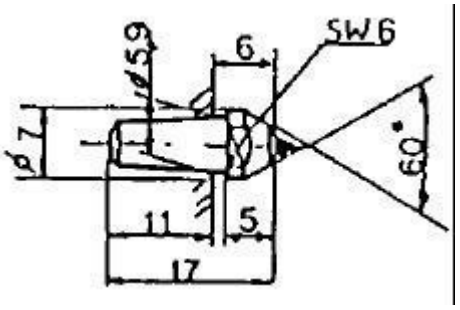

654 Jung FA 42

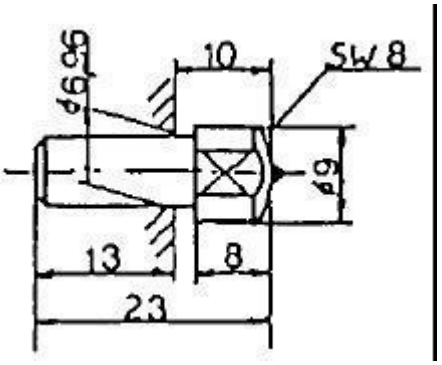

655 Kolb KZ 1 + 2

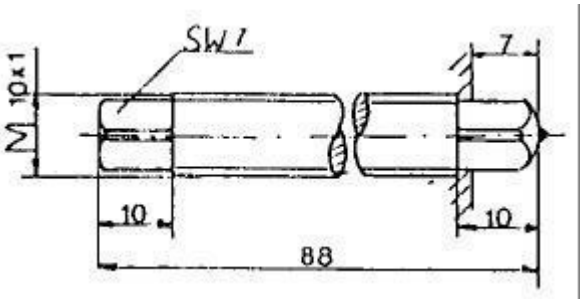

660 Niles M 10 x 1

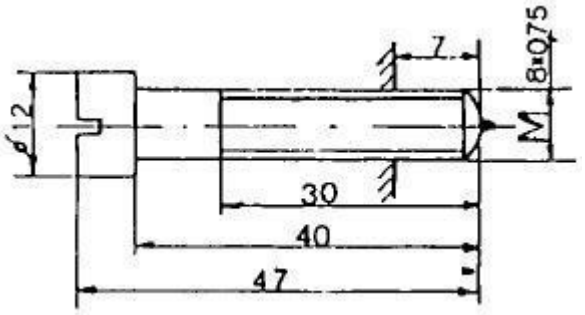

661 Niles M 8 x 0.75

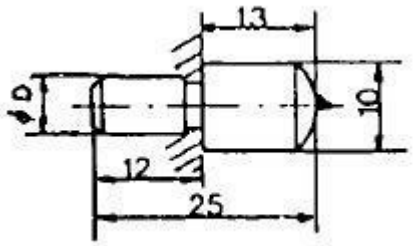

670 Landis D = 6.5 ; D = 8.0

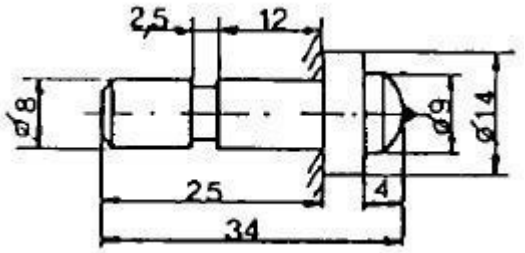

671 Nomoko

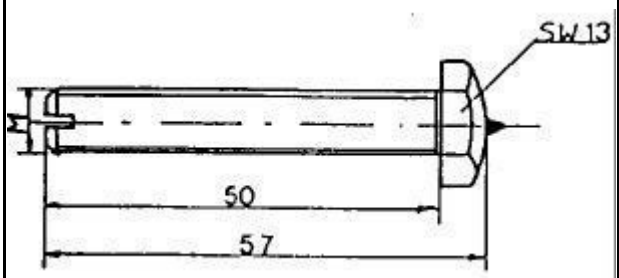

672 Höfler M 8 x 0.75

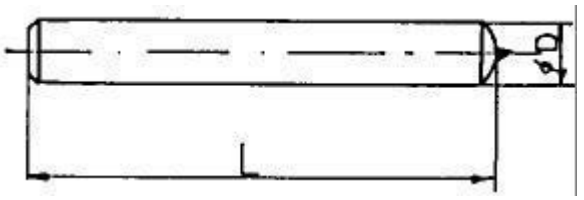

680 Cylinder D und L, to be specified

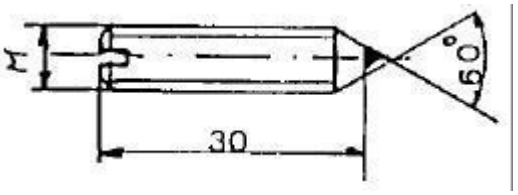

681 M 8 x 0.75

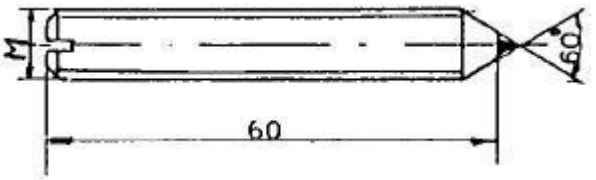

682 M 10 x 1

Diamond tool holders for manual dressing

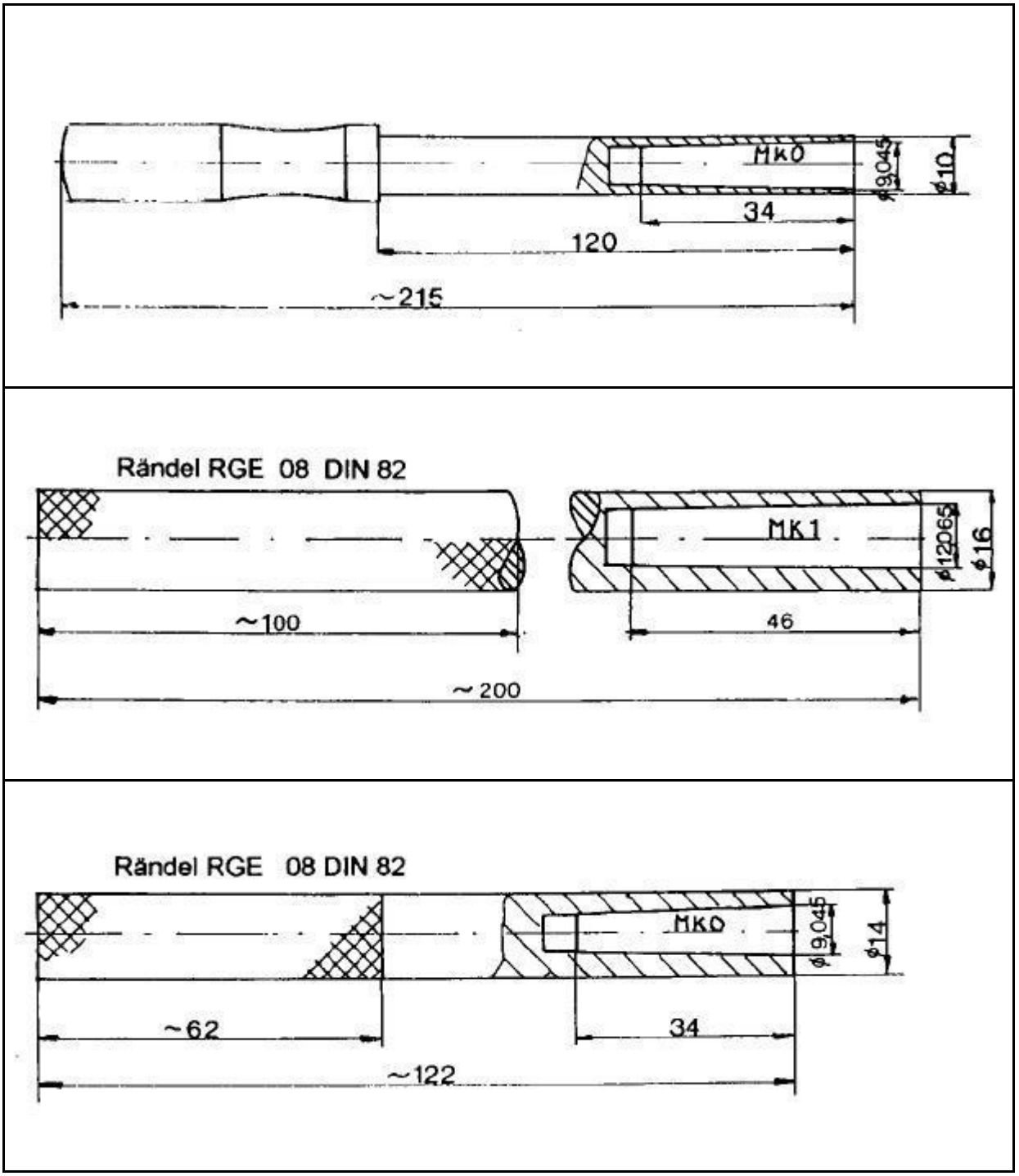

SUCO 2
Multi-point diamond dressers
Manual diamond dressers

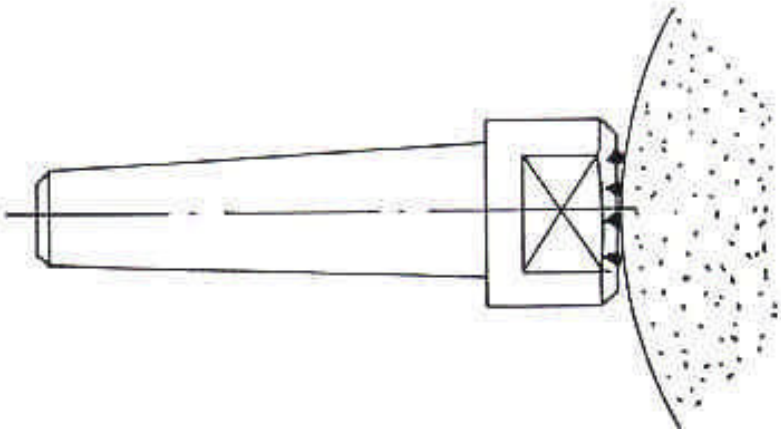

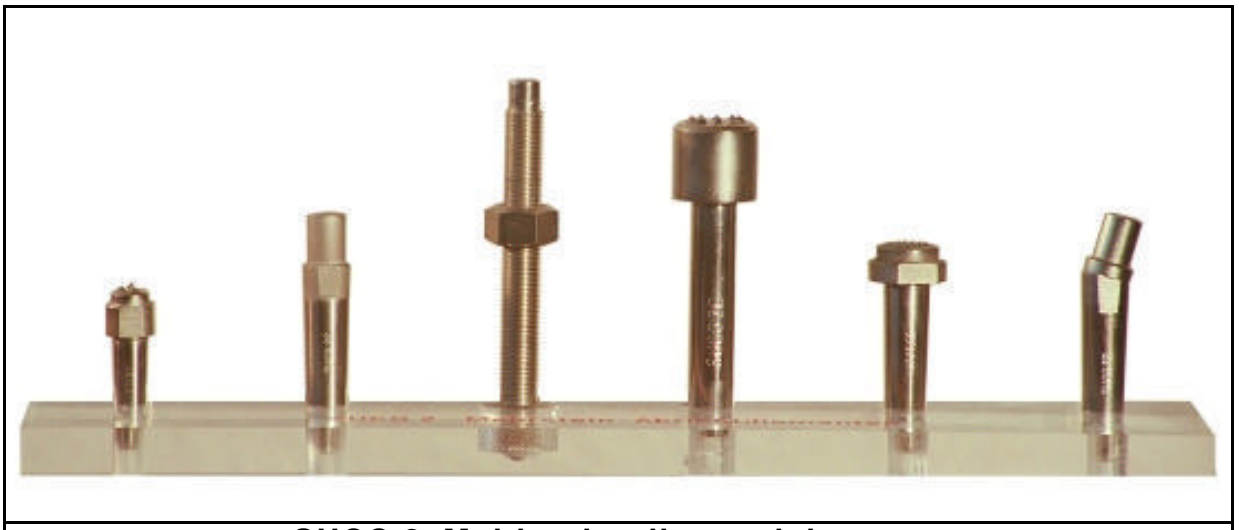

SUCO 2 Multi-point diamond dressers

According to customer's specification

SUCO 2 Multi-point diamond dressers are single- or multi-layer tools. The diamonds are set according to a given schema to ensure optimum contact with the grinding wheel. The tough bond results in optimum tool-life and minimum wastage of diamonds

Type	Diamonds	Carat	Insert Diameter	Bonds
2A	3 x 3	1.0	10	Corundum or Silicon Carbide
2B	2 x 3	1.0	10	Corundum or Silicon Carbide
2C	1 x 3	1.0	12	Corundum or Silicon Carbide
2D	1 x 5	2.5	16	Corundum or Silicon Carbide
2E	1 x 10	6.0	20	Corundum or Silicon Carbide

All shanks available according to customer's specification.

Multi-point dressing inserts

Type	Inserts	Grains / Carat Per Carat	Grain size	Bonds
R	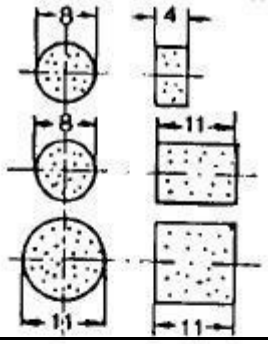	20/1.0 20/2.5 20/5.0	36 - 46	Corundum or Silicon Carbide
S	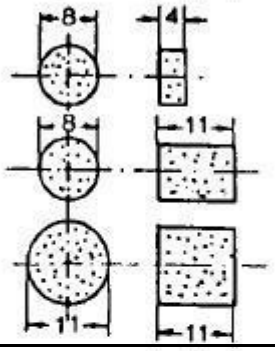	60/1.0 60/2.5 60/5.0	46 – 60	Corundum or Silicon Carbide
T	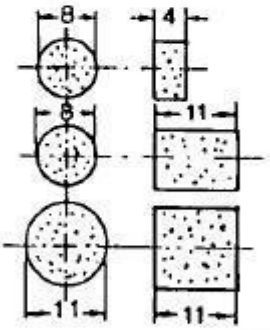	80/1.0 80/2.5 80/5.0	60 - 80	Corundum or Silicon Carbide
U	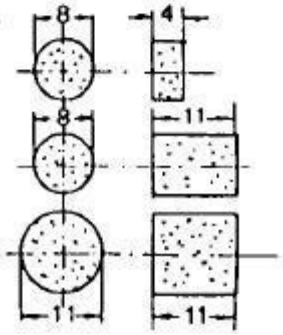	120/1.5 120/3.5 120/5.0	80 - 120	Corundum or Silicon Carbide

Shanks available according to customer's specification.

SUCO 2 Manual diamond dressers

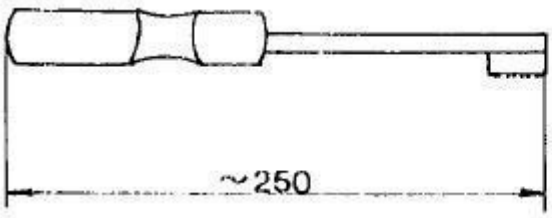

Straight type

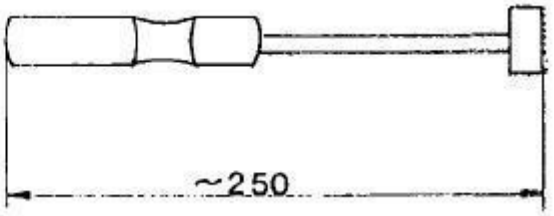

Universal or T-shape type

Type	Shape	Carat	Design
H 50	Universal	1.50	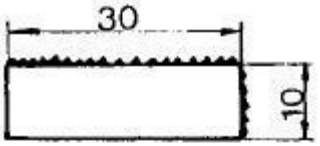
H 50	T-shape or straight	1.50	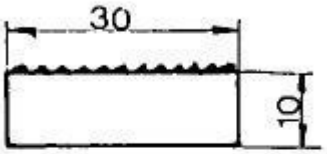
H 55	Universal	2.50	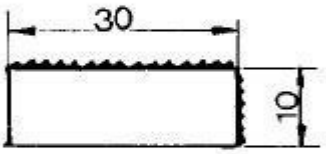
H 55	T-shape or straight	2.50	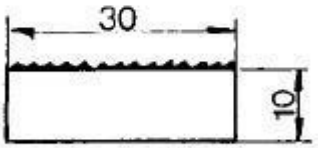
H 60	T-shape or straight	6.00	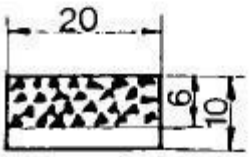

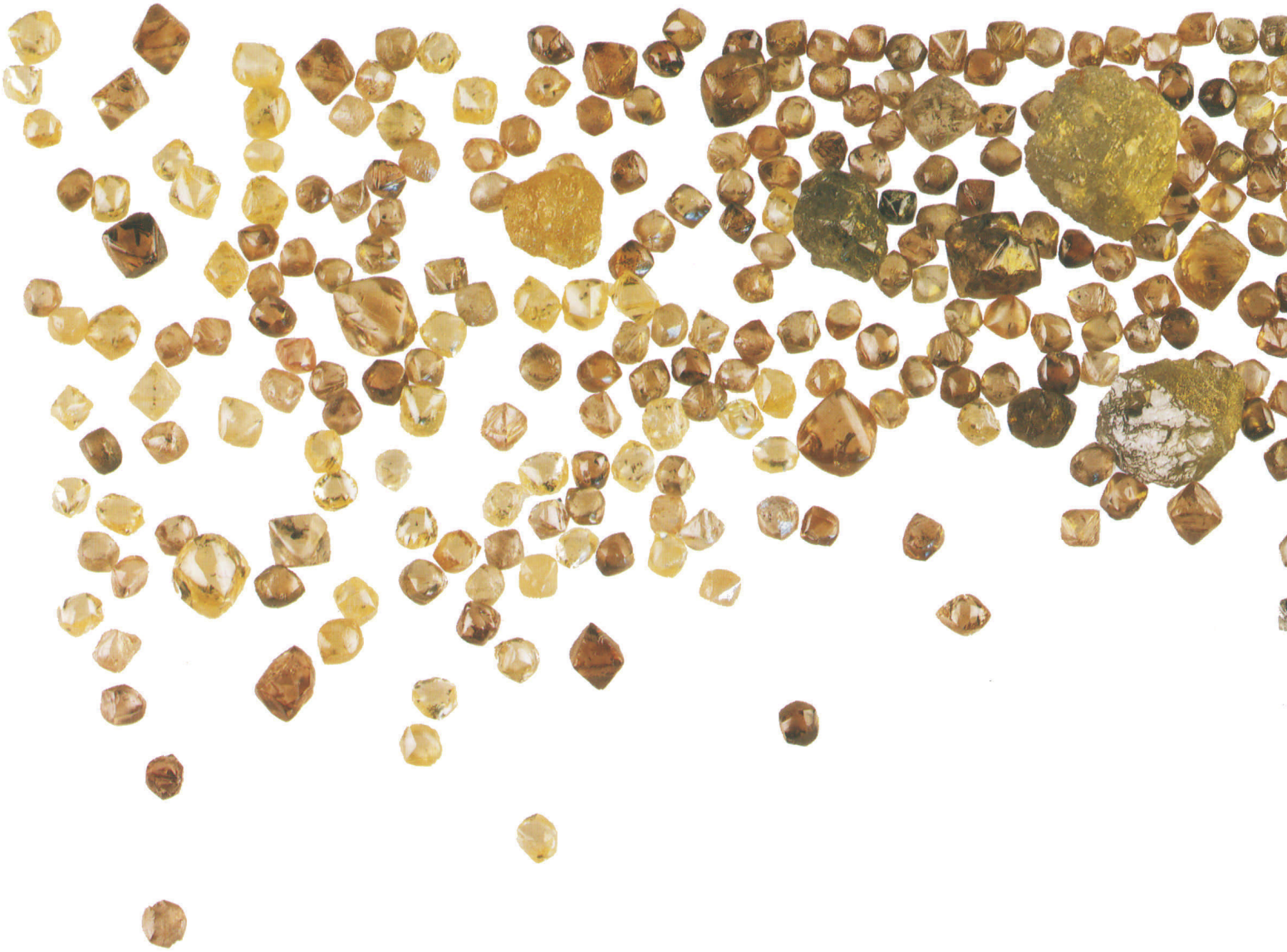

SUCO 3
Impregnated diamond dressers

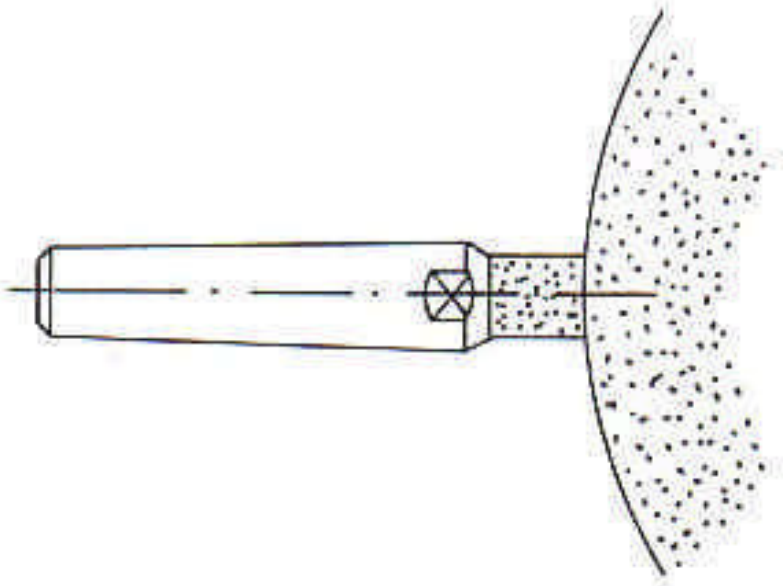

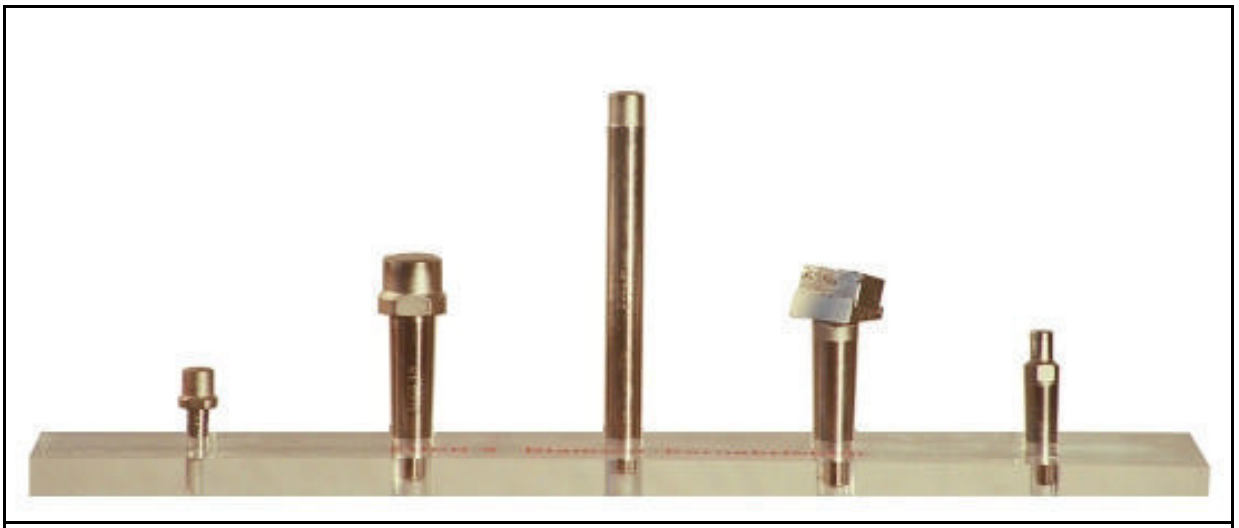

SUCO 3 Impregnated diamond dressers

According to customer's specification

SUCO 3 Impregnated diamond dressers are dressing tools in which the diamonds are sintered into a tough bond.
The diamond insert remains serviceable until completely used up.

Type	Diamond insert	Carat	Bond
3A	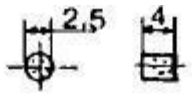	0.10	Corundum or Silicon Carbide
3B	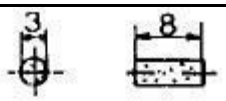	0.40	Corundum or Silicon Carbide
3C	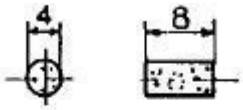	0.70	Corundum or Silicon Carbide
3D	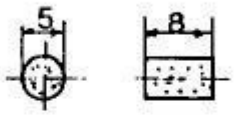	1.00	Corundum or Silicon Carbide
3E	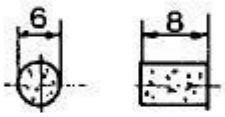	1.50	Corundum or Silicon Carbide
3ES	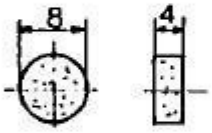	1.30	Corundum or Silicon Carbide
3F	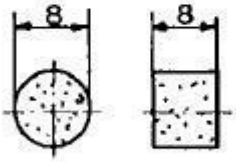	2.50	Corundum or Silicon Carbide
3G	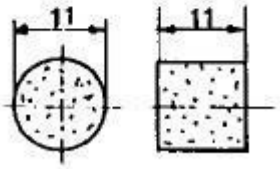	7.00	Corundum or Silicon Carbide
3H	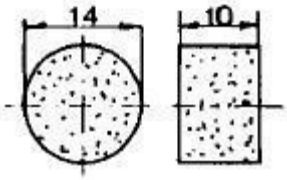	10.00	Corundum or Silicon Carbide

Shanks available according to customer's specification.

Diamond Grain Size	Grinding Wheel Grain Size
D 1181	36 to 54
D 711	54 to 60
D 356	60 to 100
D 251	100 to 120
D 181	120 to 180
D 107	180 to 320
D 76	320 to 600

Examples of shanks available

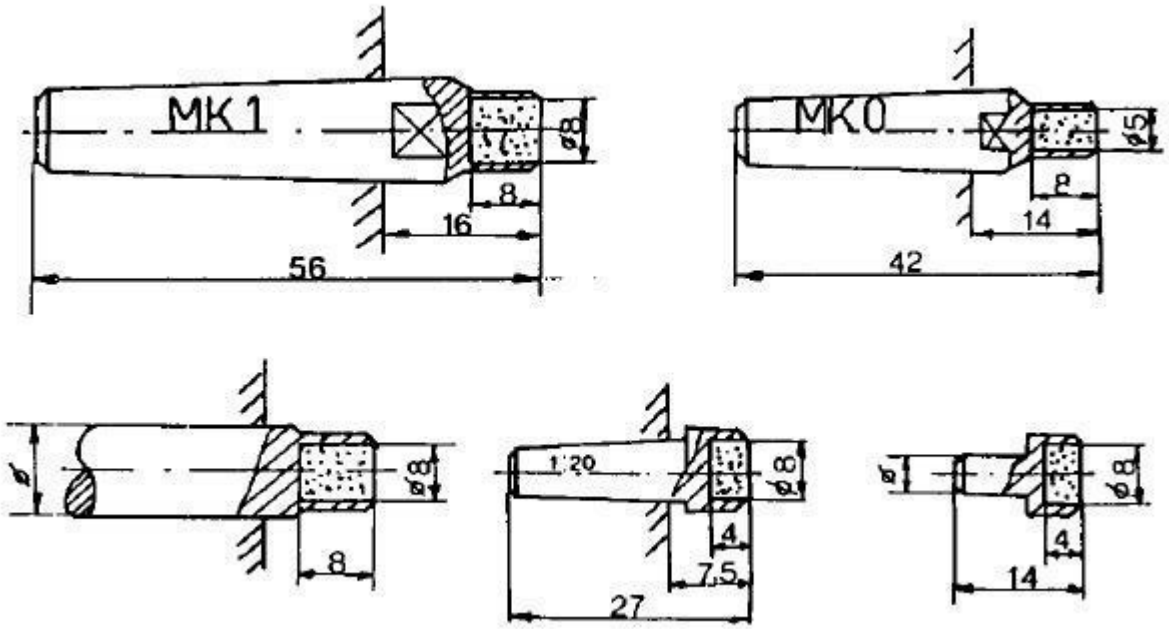

or shanks available according to customer's specification.

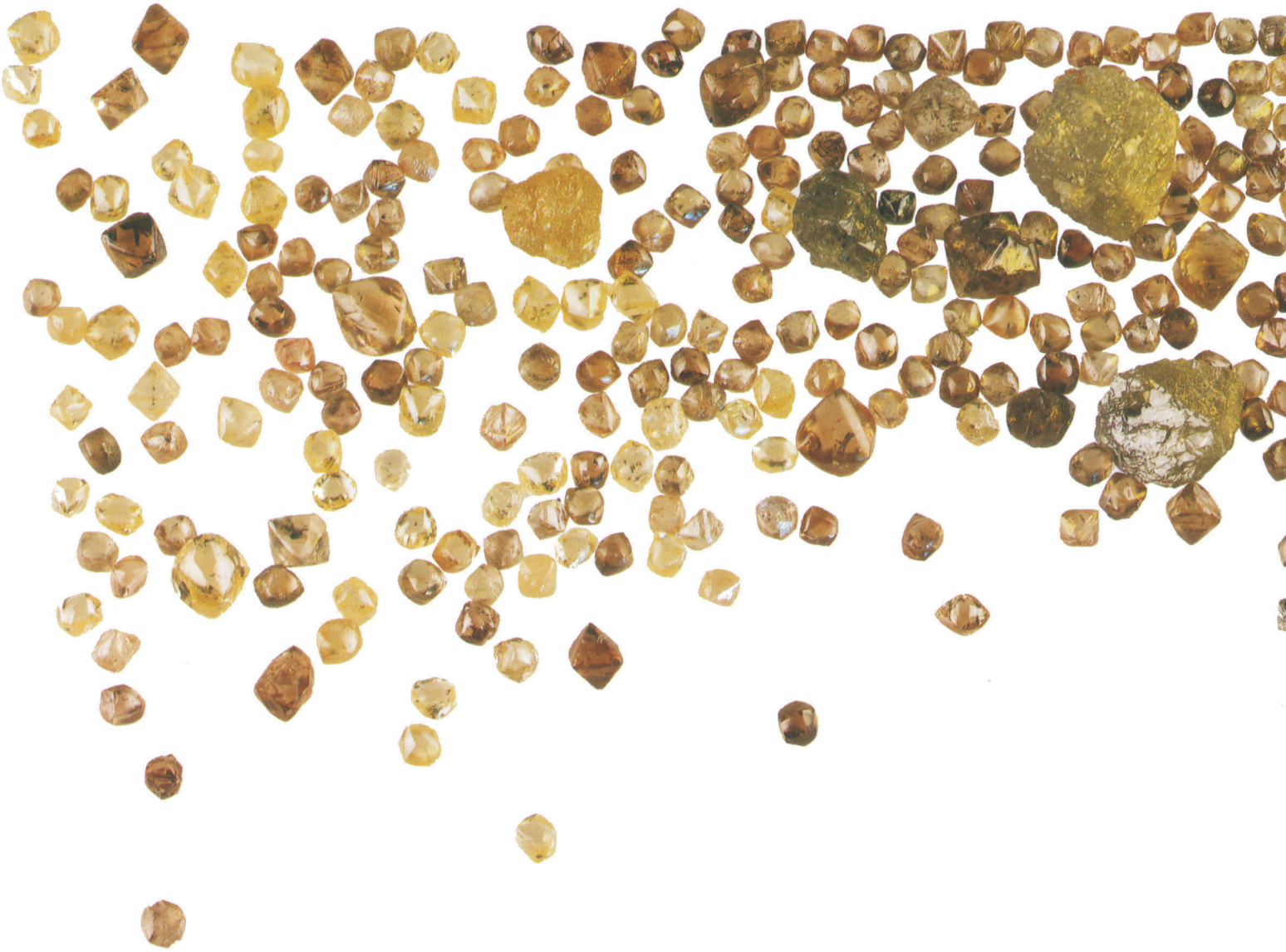

SUCO 4
Diamond dressing rings

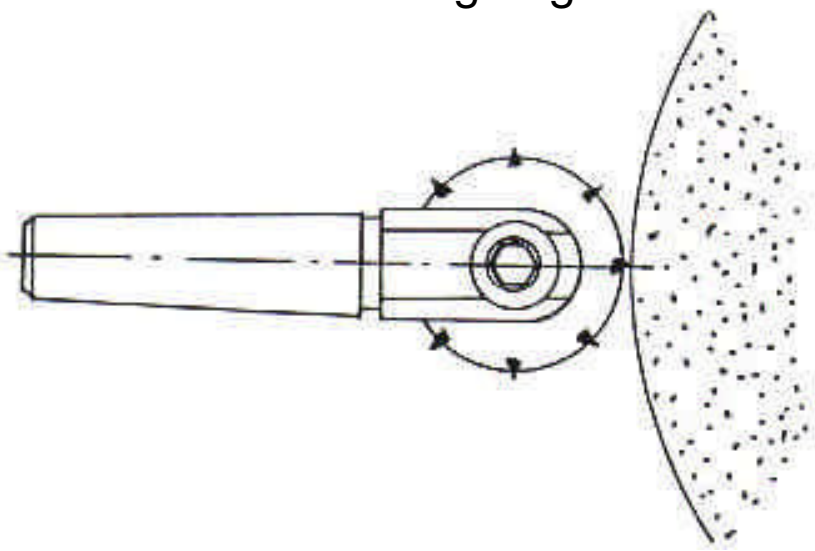

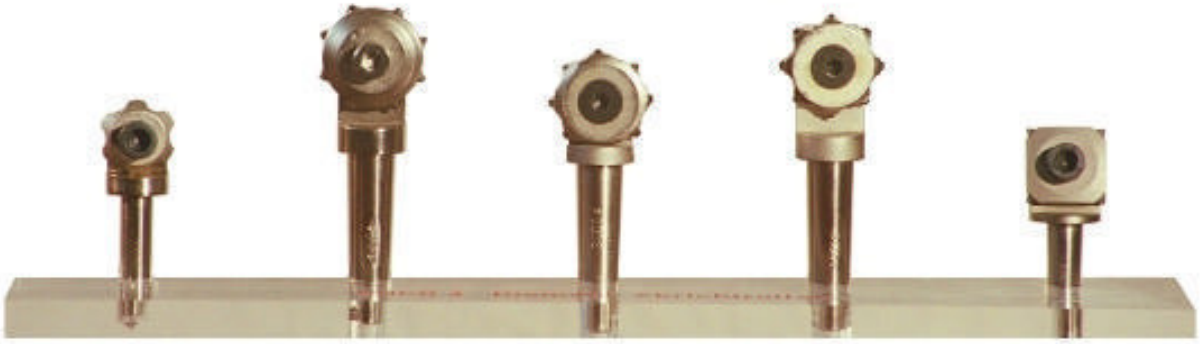

SUCO 4 Diamond dressing rings

According to customer’s specification

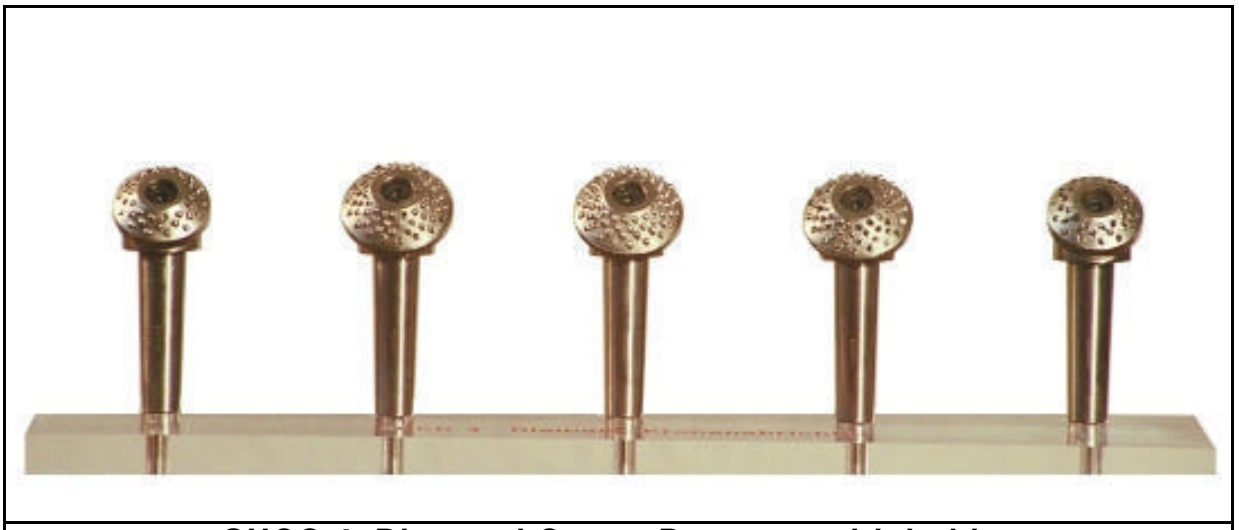

SUCO 4 Diamond Crown Dressers with holder

According to customer's specification

SUCO 4 Diamond dressing rings are tools with radially set diamonds along the perimeter of a ring.
The rings are turned at regular intervals, ensuring that new sharp diamonds are continually in use.

Diamond Dressing Rings

Type	Design	Carat	Type of diamond	Use
4A	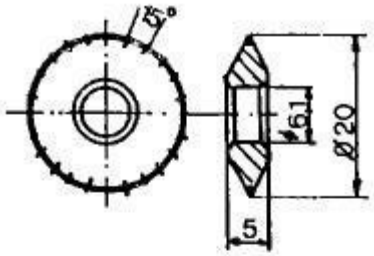	1.00	Needles 1 layer	Internal grinding
4B	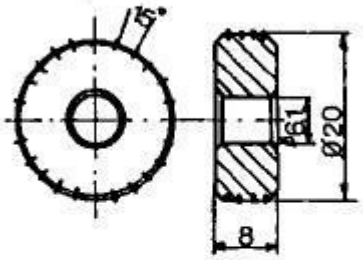	2.00	Needles 4 layers	Universal
4C	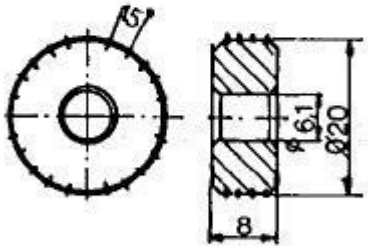	3.00	Needles 4 layers	Universal
4F	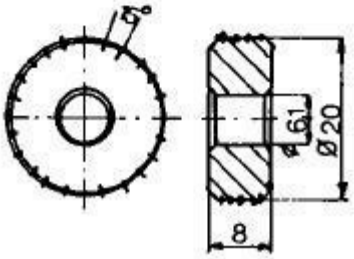	5.00	Needles 5 layers	Universal

Holder MK 0 or MK 1

Diamond Dressing Rings

Typ	Design	Carat	Type of diamond	Use
4G	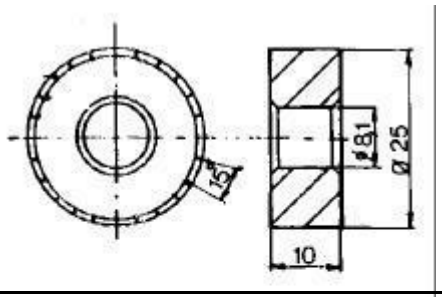	7.50	Needles 8 layers	Universal
4H	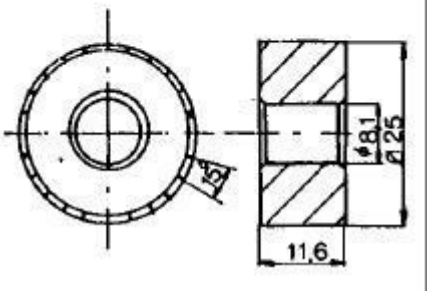	10.00	Needles 8 layers	Universal

Diamond Crown Dressers

4K	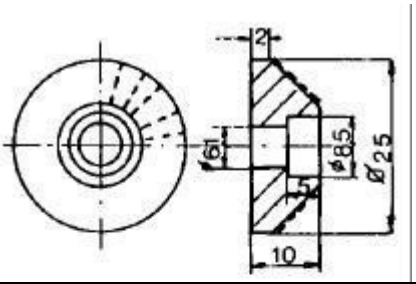	2.00	Needles	Universal
4L	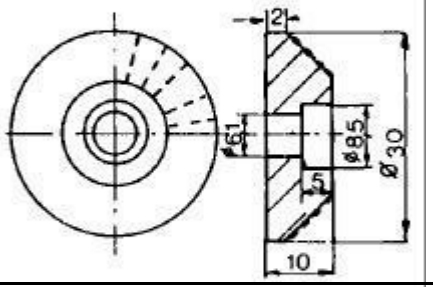	3.00	Needles	Universal
4M	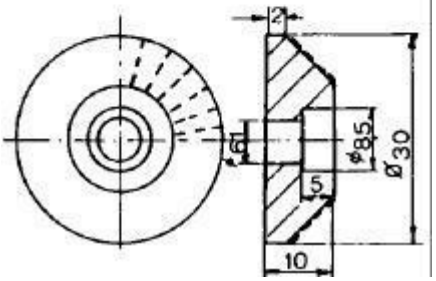	5.00	Needles	Universal

Holder MK 0 or MK 1

Diamond Profile Dressing Rings

Typ	Design	Carat	Type of diamond	Use
4X	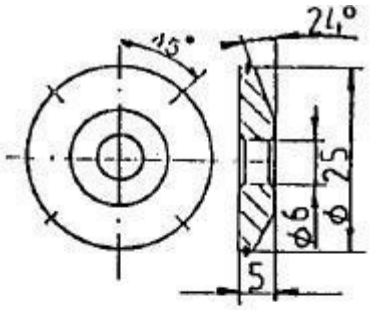	1.00 1.50	Triangles 1 layer Needles 1 layer	Profile Universal
4Y	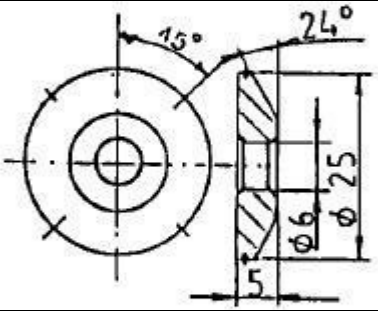	2.00 2.50	Triangle 1 layer Needles 1 layer	Profile Universal
4Z	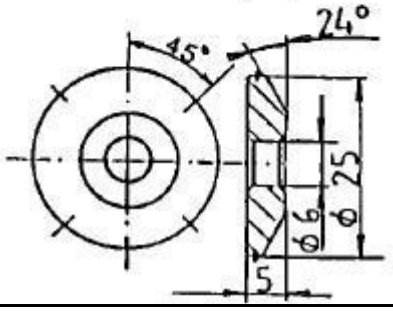	3.00 3.50	Triangle 1 layer Needles 1 layer	Profile Universal

Holder MK 0 or MK 1 according to customer's specification.

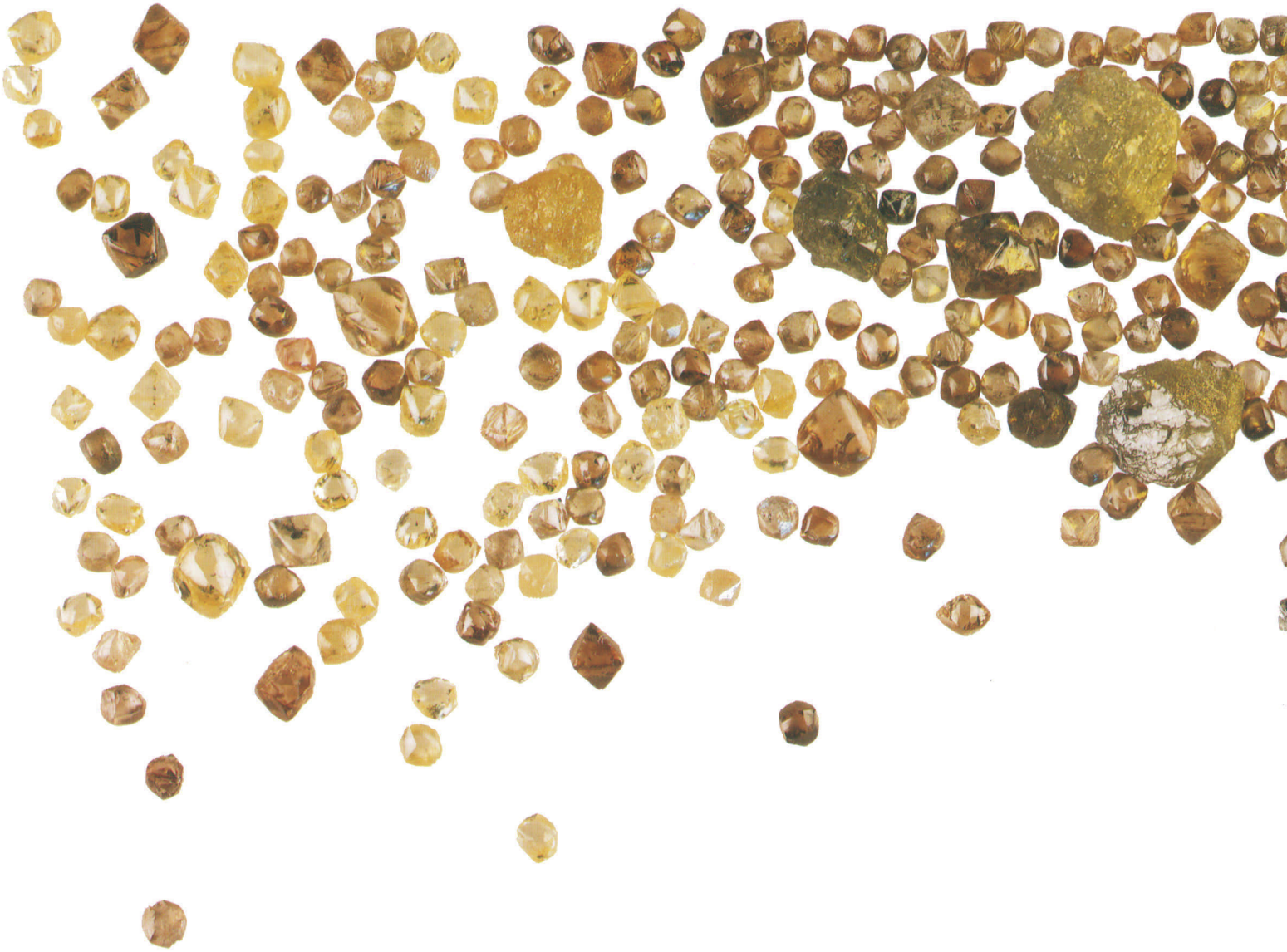

SUCO 5
Diamond refill dressers

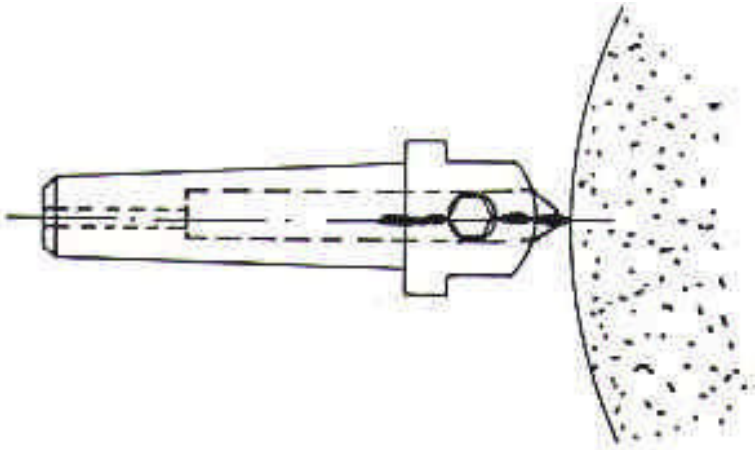

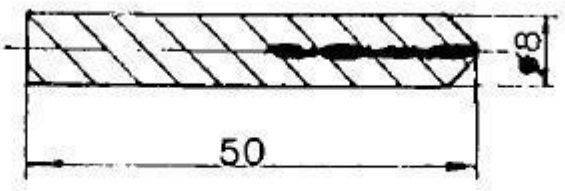

SUCO 5 diamond refill dressers consist of four elongated diamonds, which are arranged to ensure continuous service without wastage.

Type	Diamonds	Carat
5A	4	1.0
5B	4	1.5
5C	4	2.0

Holder: MK 0 - hollow shank
MK 1 - hollow shank
according to customer's specification.

SUCO 6
Diamond dressing points

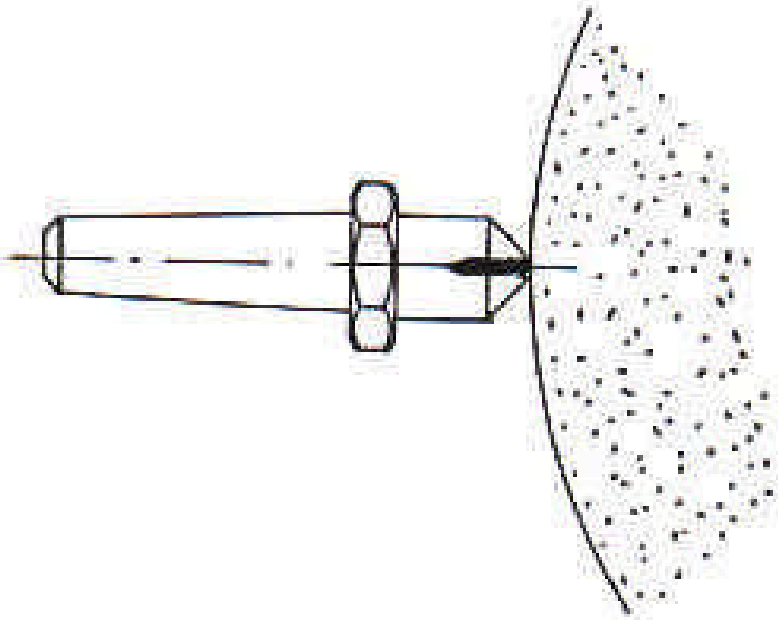

SUCO 6 Diamond dressing points consist of one elongated diamond respectively, which, if used properly, ensures that there is no wastage.

Type	**Carats**
6A	0.50
6B	0.75
6C	1.00
6D	1.50
6E	2.00
6F	2.50
6G	3.00

Shanks available to customer's specification.

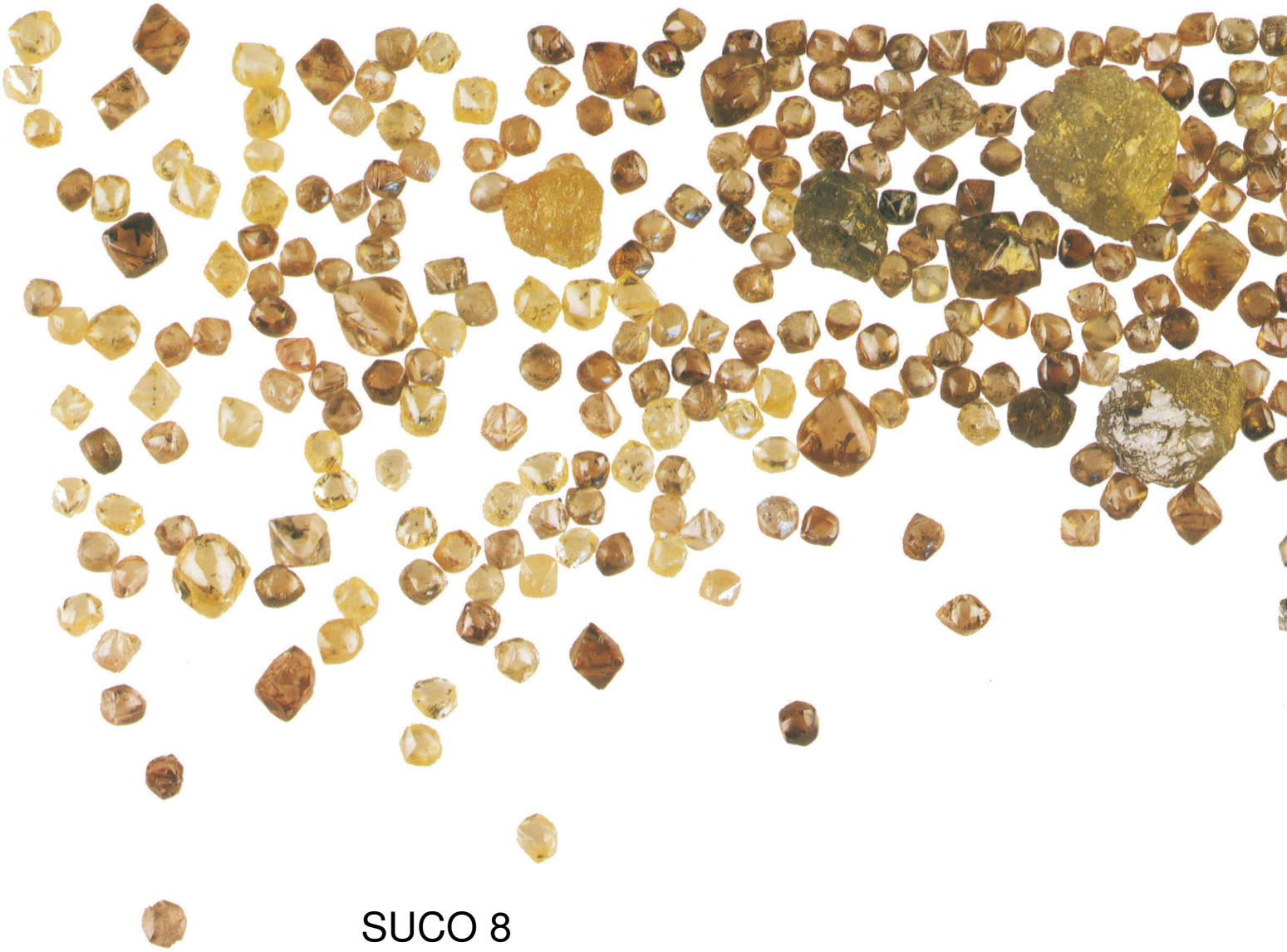

SUCO 8
Diamond plates

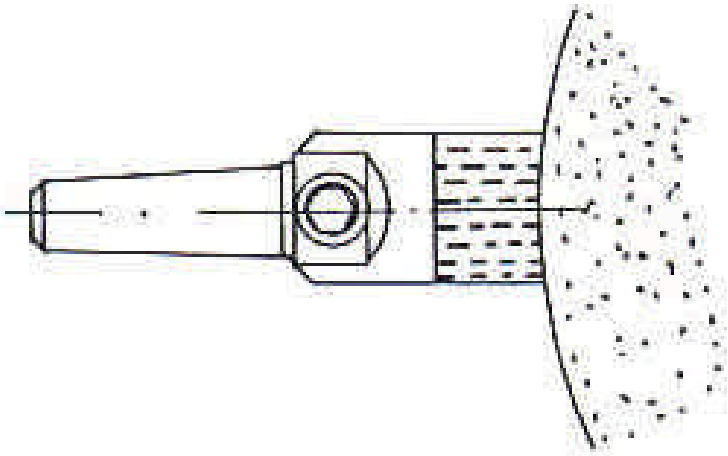

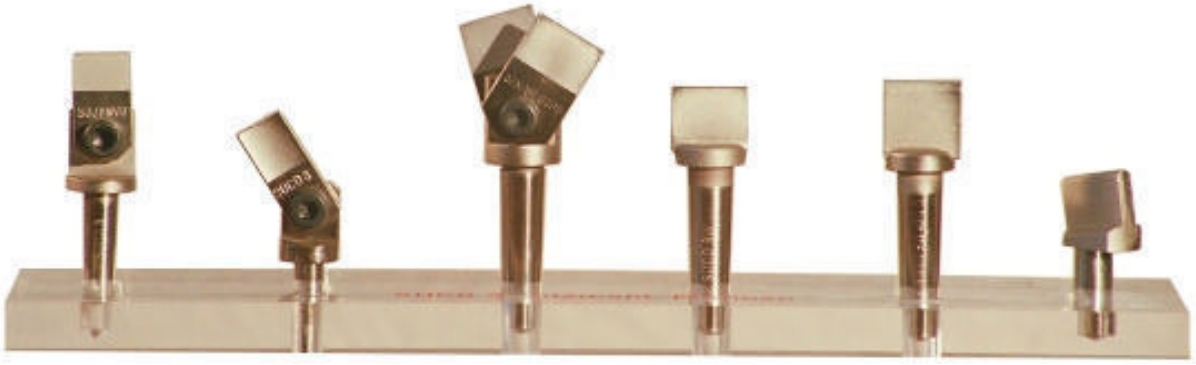

SUCO 8 Diamond plates

Examples of holders:

Instructions for using SUCO 8 diamond plates

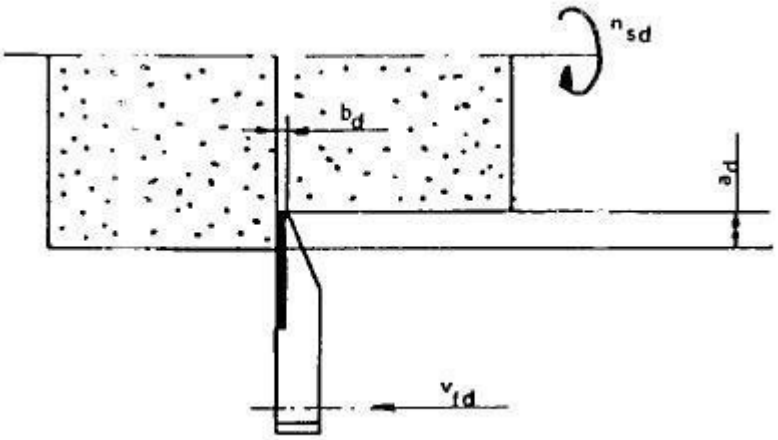

$U_d = \frac{b_d \cdot n_{sd}}{v_{fd}}$	$v_{fd} = \frac{b_d \cdot n_{sd}}{U_d}$

u_d = degree of overlapping (- -)
b_d = active width of dressing tool (mm)
s_d = infeed of dressing tool per wheel revolution (min^{-1})
n_{sd} = grinding wheel revolutions (min^{-1})
v_{fd} = rate of feed of dressing tool (mm min^{-1})
a_d = feed motion (mm)

Rough grinding	$U_d = 2 - 3$	($a_d = 0.02 - 0.03$ mm)
Smooth-polishing	$U_d = 6 - 8$	($a_d = 0.01 - 0.02$ mm)
Finish-grinding	$U_d = 8 - 10$	(a_d = ca. 0.005 mm)

<u>Please note:</u> It is important to ensure that the dressing tool is inserted correctly! Always remember to use coolant lubricant!

SUCO 8 Size of diamond plates in relation to grinding wheel dimensions

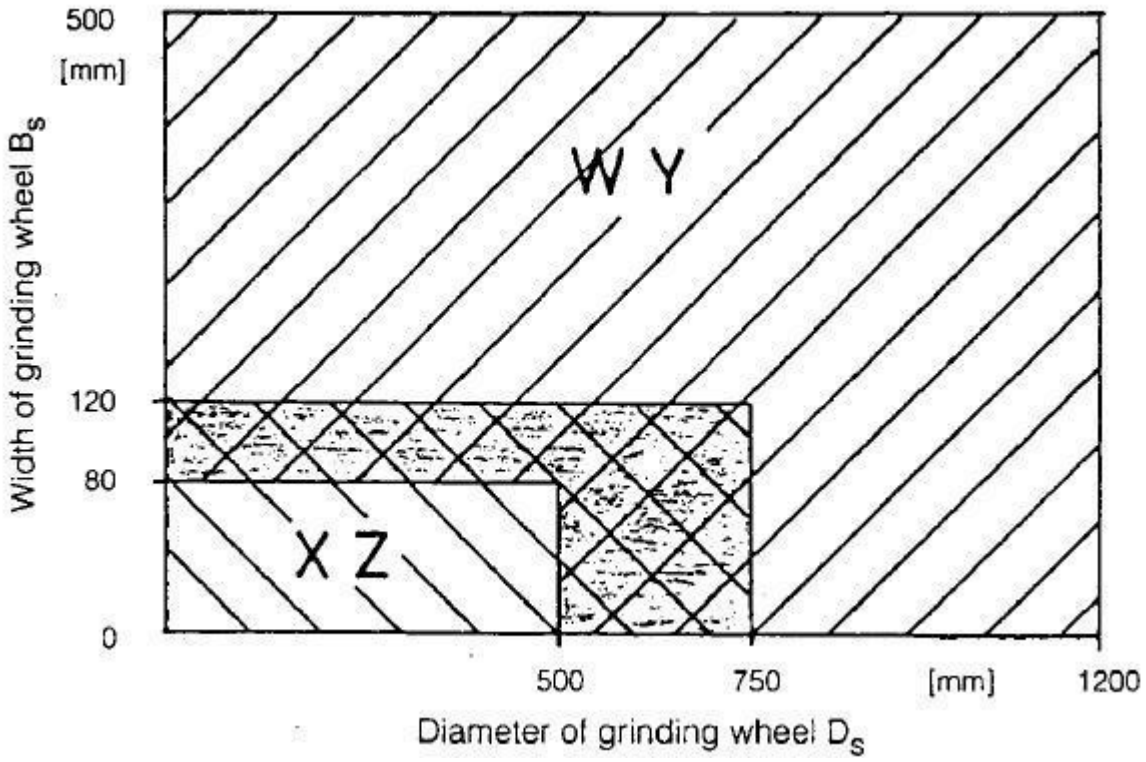

Grinding wheel grit size	Diamond grain size
36 – 54	1181
54 – 80	1001
80 - 120	711

SUCO 8 Diamond grit plates

Type	Plate design for Corundum	Grain-/ depth size X	Type	Plate design for Corundum
8W	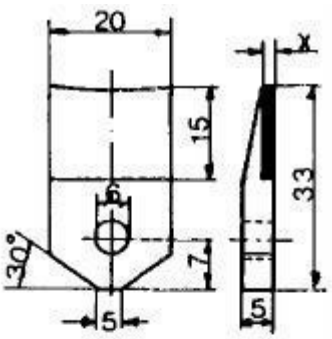	D 1181/ 1.40 D 1001/ 1.15 D 711/ 0.90	8WM	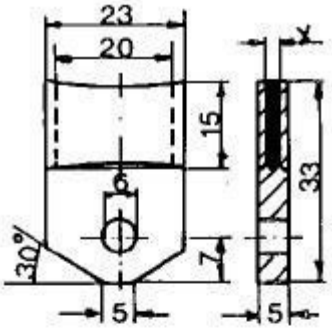
8Y	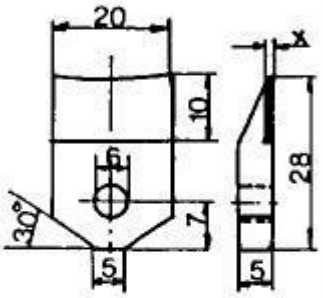	D 1181/ 1.40 D 110/ 1.15 D 711/ 0.90	8YM	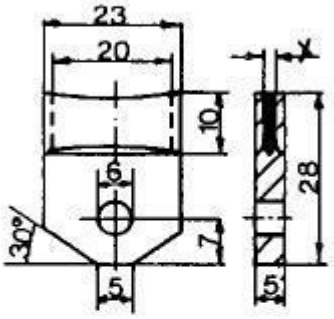
8X	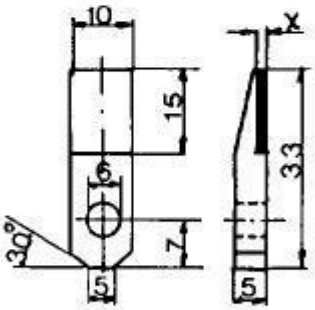	D 1181/ 1.40 D 110/ 1.15 D 711/ 0.90	8XM	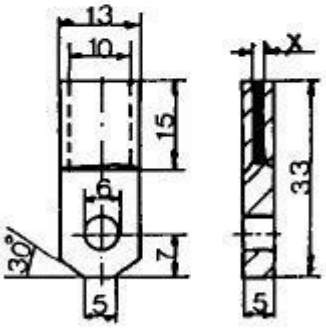
8Z	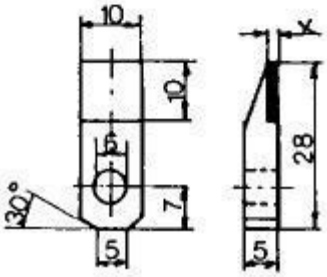	D 1181/ 1.40 D 110/ 1.15 D 711/ 0.90	8ZM	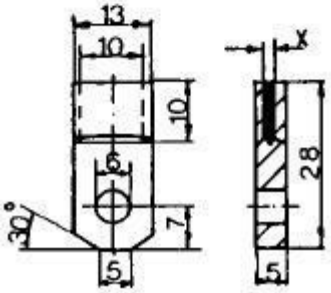

Available with swivelling holder or with plate rigidly soldered into the shank

SUCO 8 Diamond needle plates

Type	Design		Type	Design
8WN	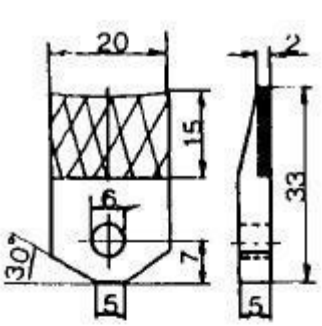		8WNM	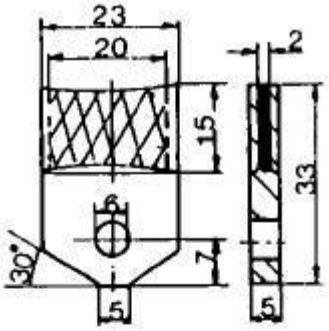
8YN	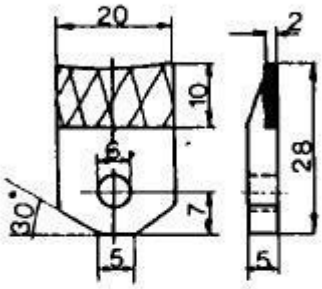		8YNM	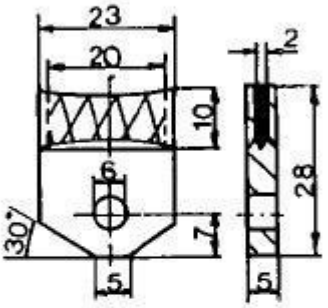
8XN	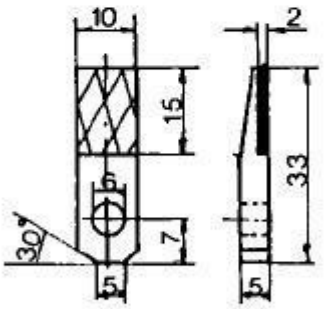		8XNM	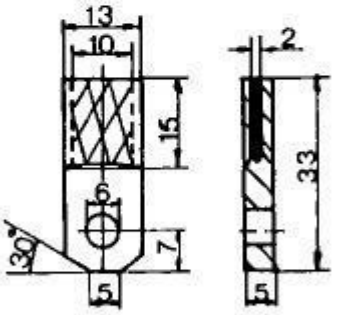
8ZN	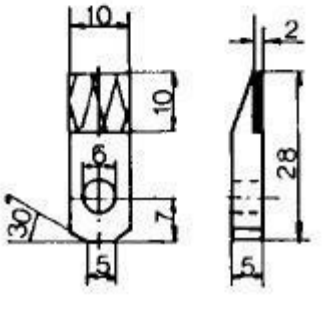		8ZNM	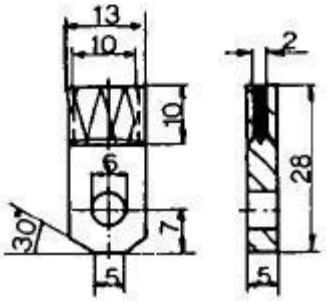

Available with swivelling holder or with plate rigidly soldered into the shank

Examples of holders

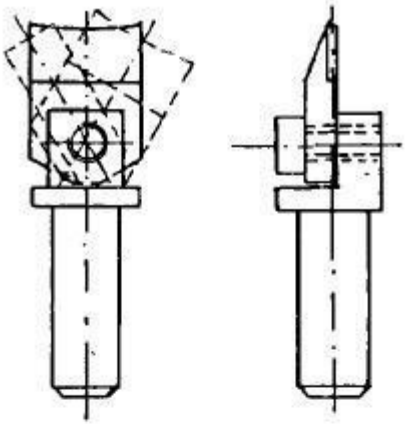

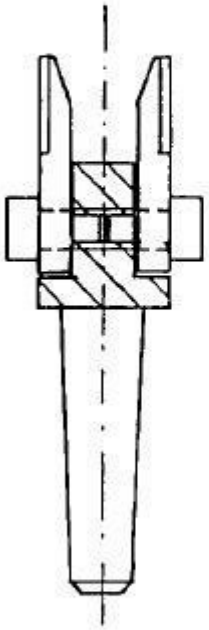

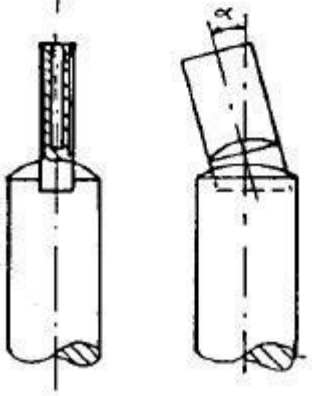

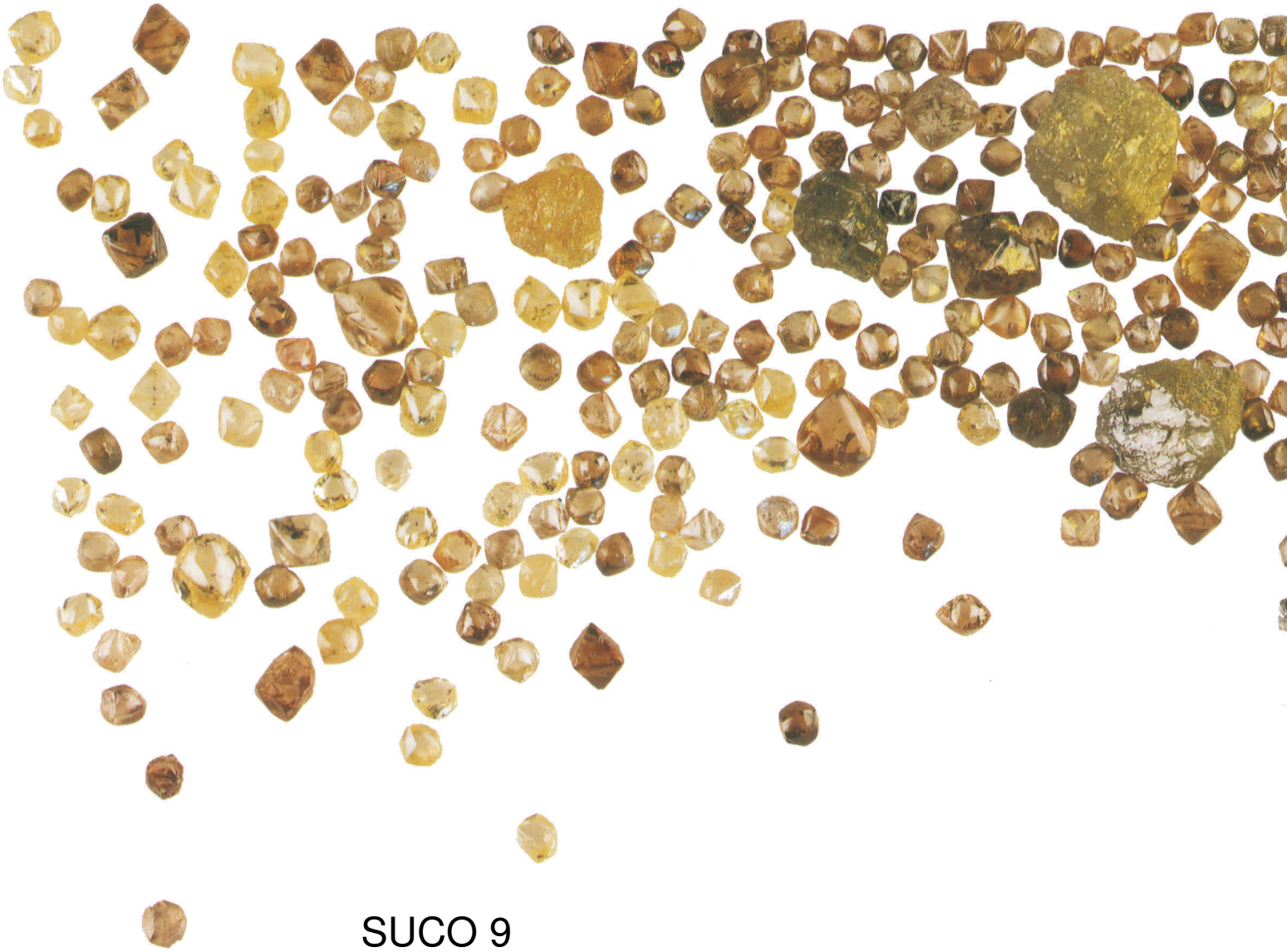

SUCO 9
Shaped diamonds made from natural diamonds

Shape Diamond

Macle diamond

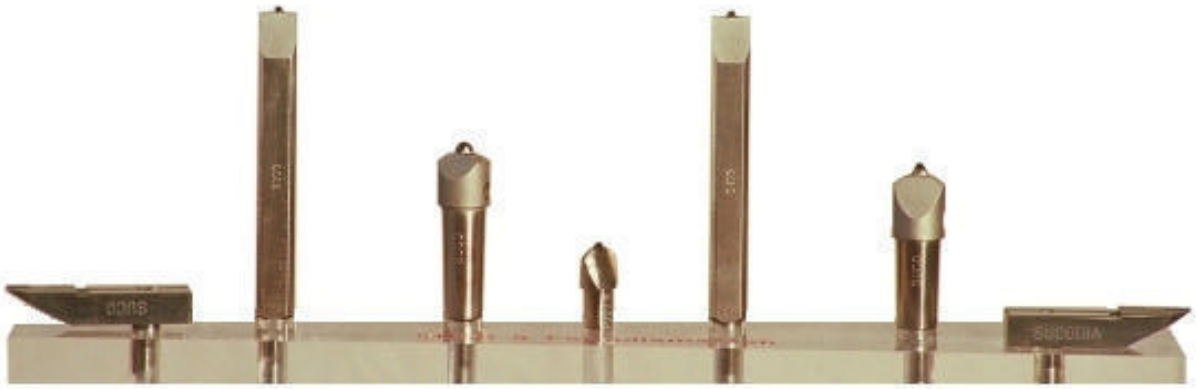

SUCO 9 Shaped diamonds

Diarawi

Schaudt

MSO

Reishauer NZA

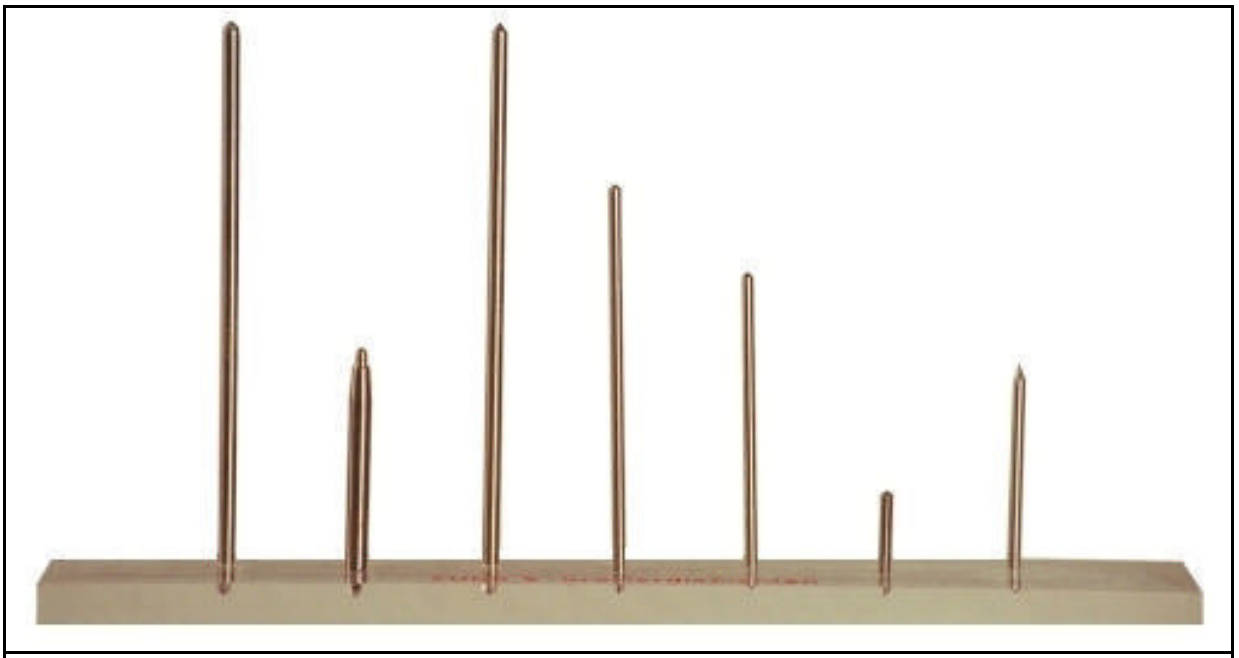

SUCO 9 Gravierdiamanten

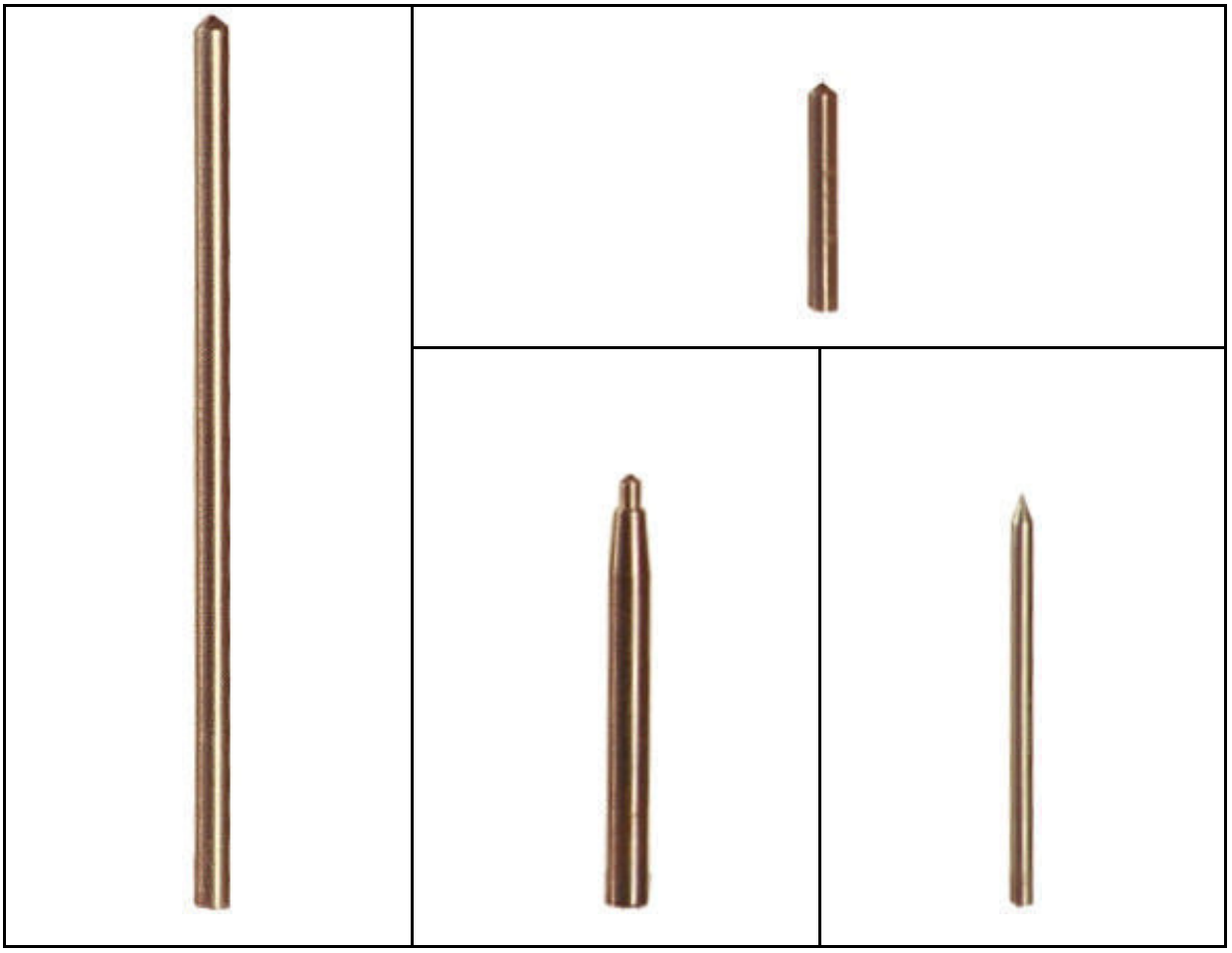

According to customer's specification

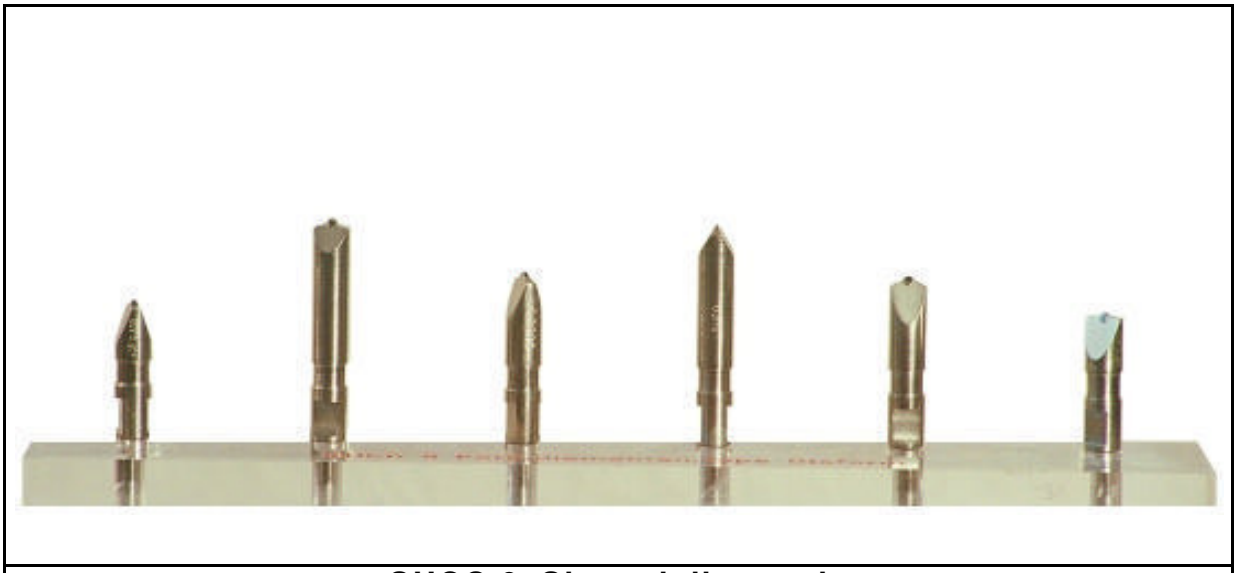

SUCO 9 Shaped diamonds

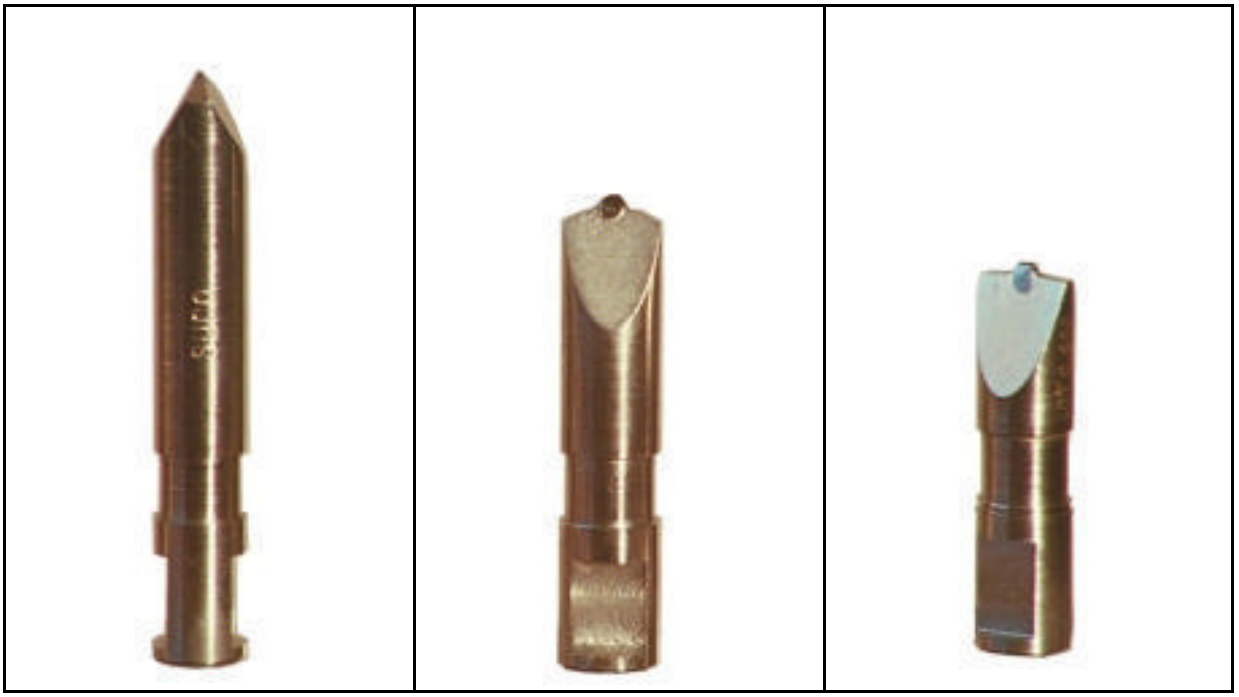

According to customer's specification

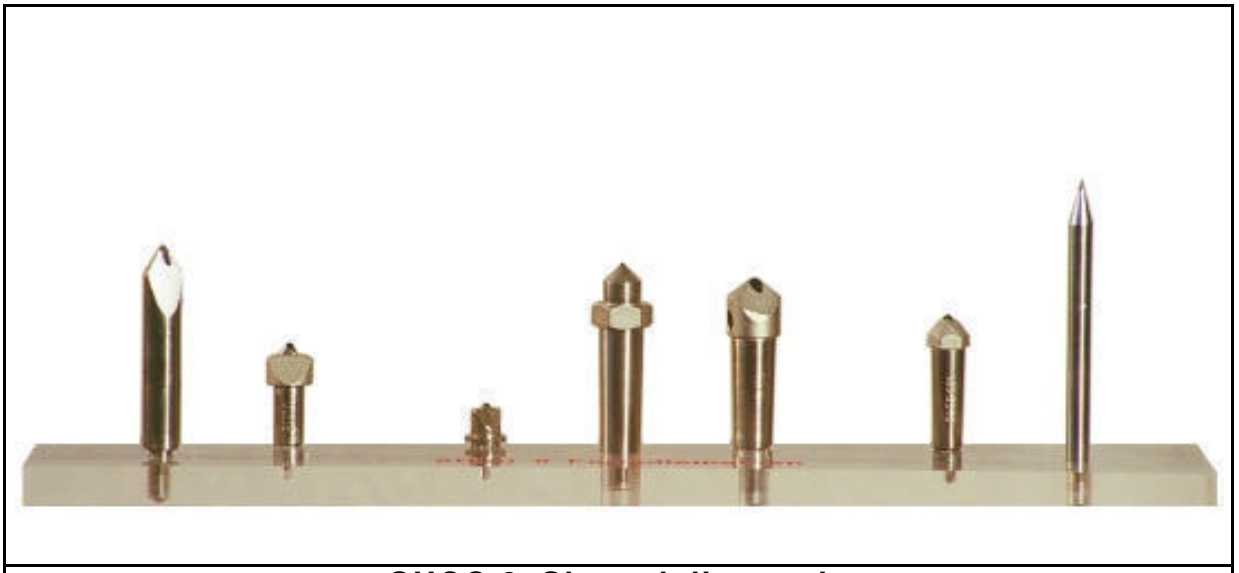

SUCO 9 Shaped diamonds

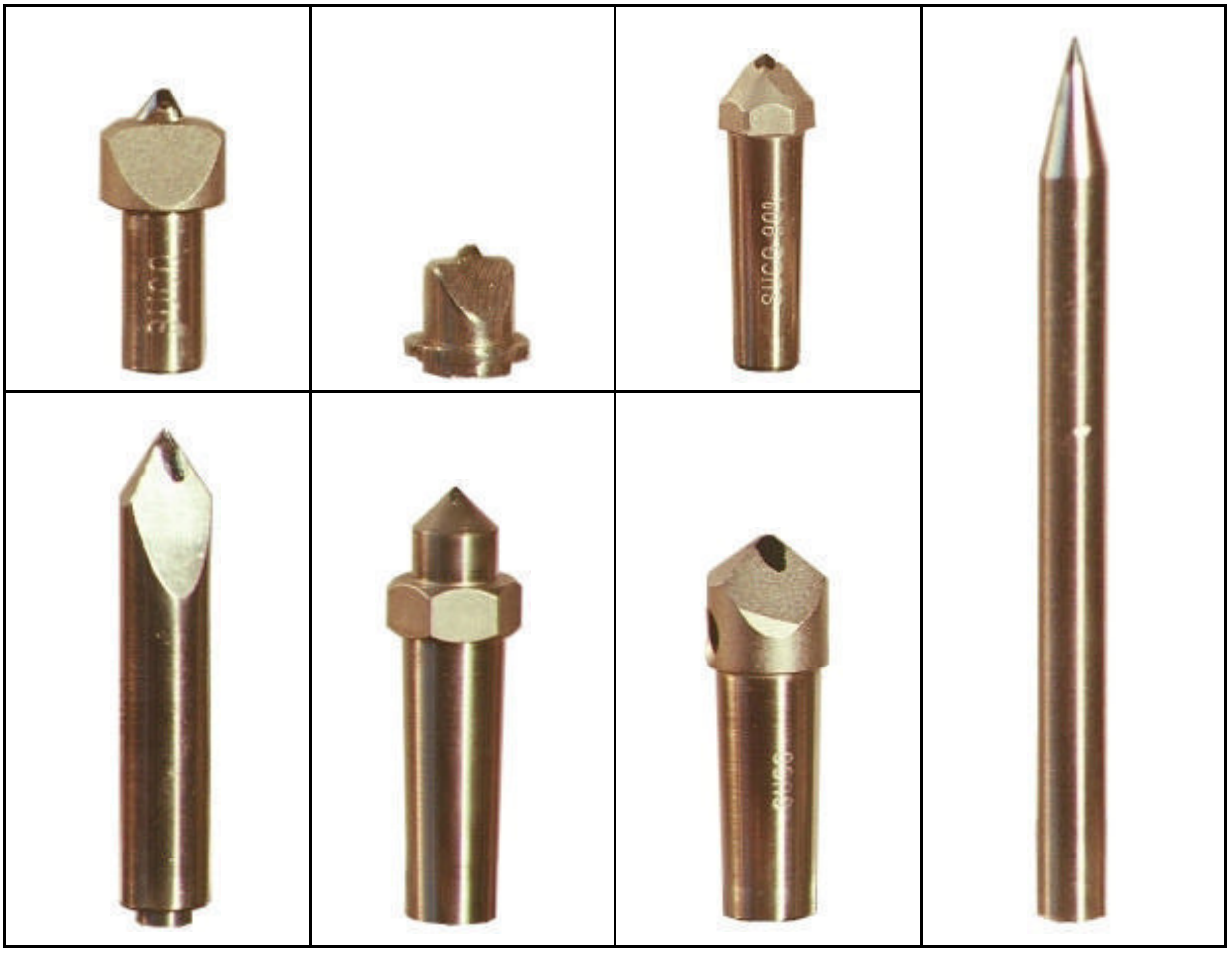

According to customer's specification

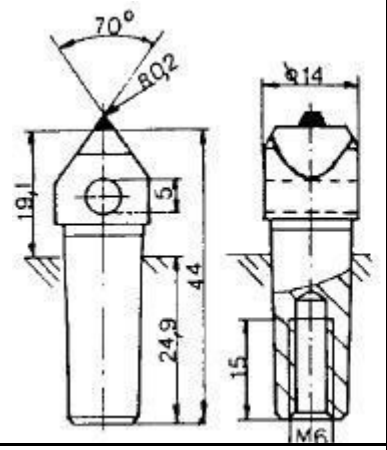	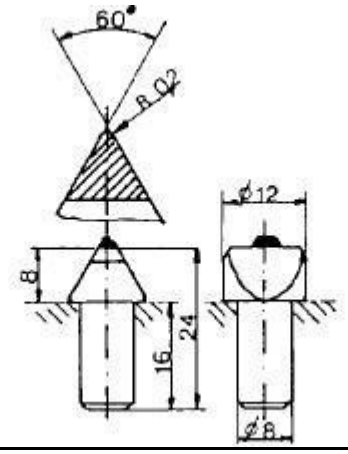	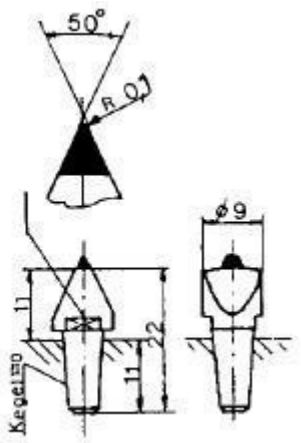
Schaudt	**MSO**	**Jung RA*38*-53**
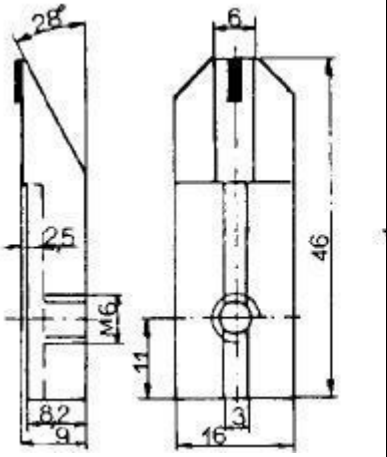	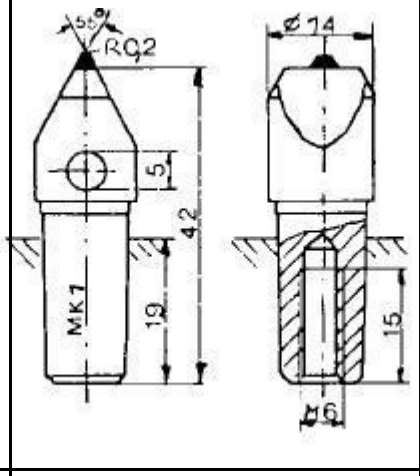	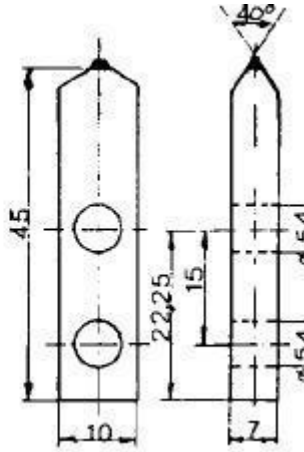
Reishauer NZA	**Fortung**	**Schaudt**

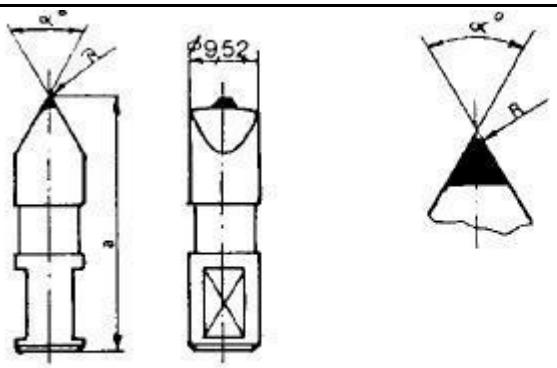

a	36 ; 45 ; 58
α	40°; 60°
R	0,125; 0,250; 0.500

Diaform

SUCO H
Hardness testing diamonds made
From natural diamonds

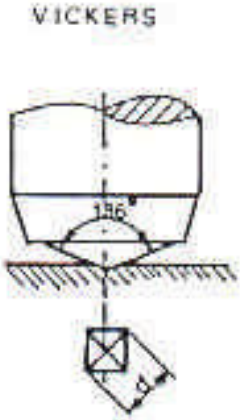

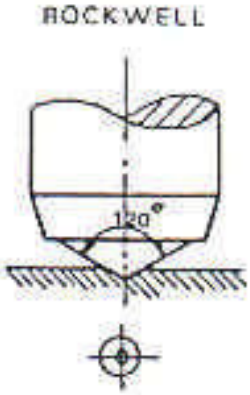

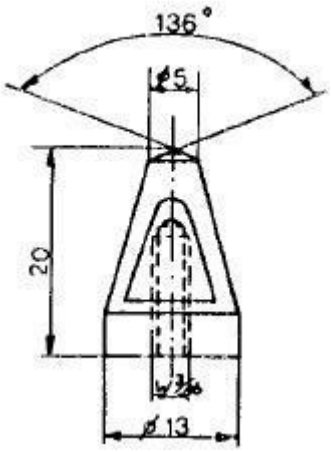	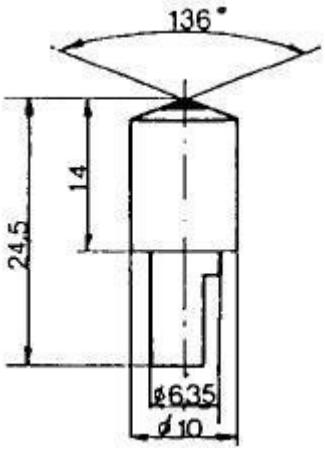	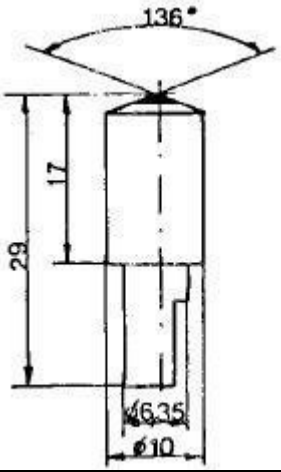
V10 Original Vickers	V11 Vickers (Frank)	V12 Dia Testor (Wolpert)
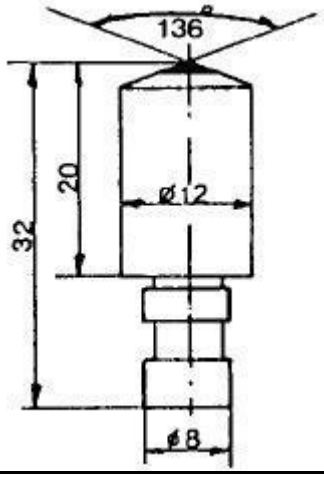	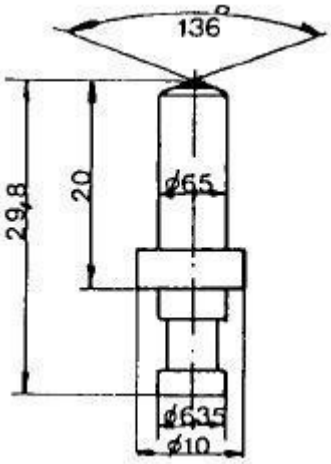	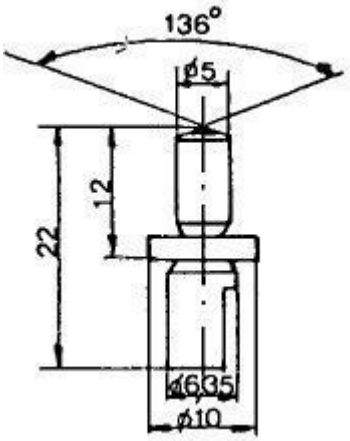
V13 Brivisor 3800H (Reicherter)	V14 VHT 5 (Reicherter)	V15 Zwick 1
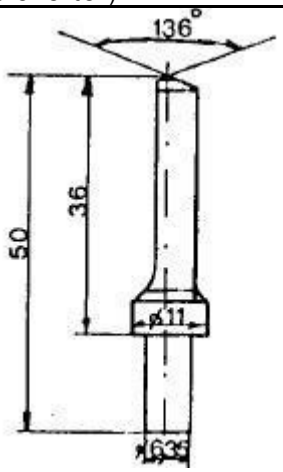	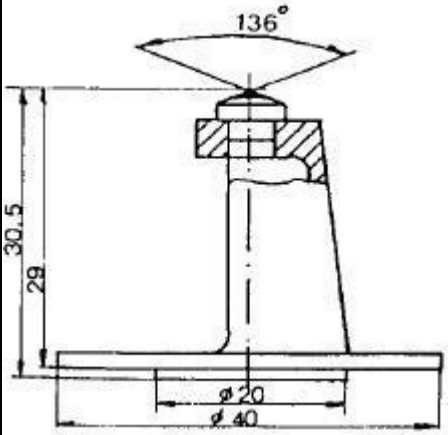	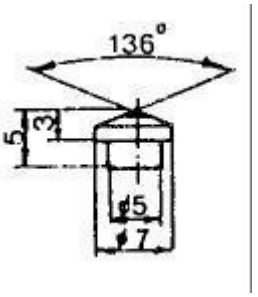
V16 Zwick 2	V17 Briviskop 187.5 (Reicherter)	V18 B183 (Reicherter)

Vickers DIN50 133 and 51 225

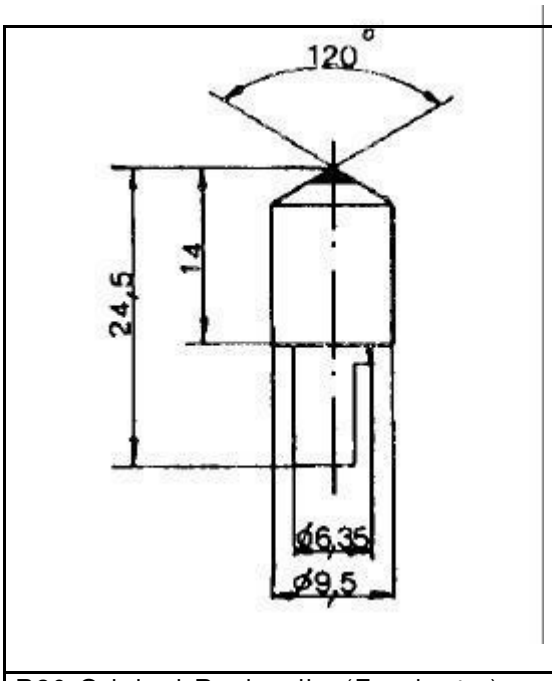

R20 Original Rockwell (Frank etc.)

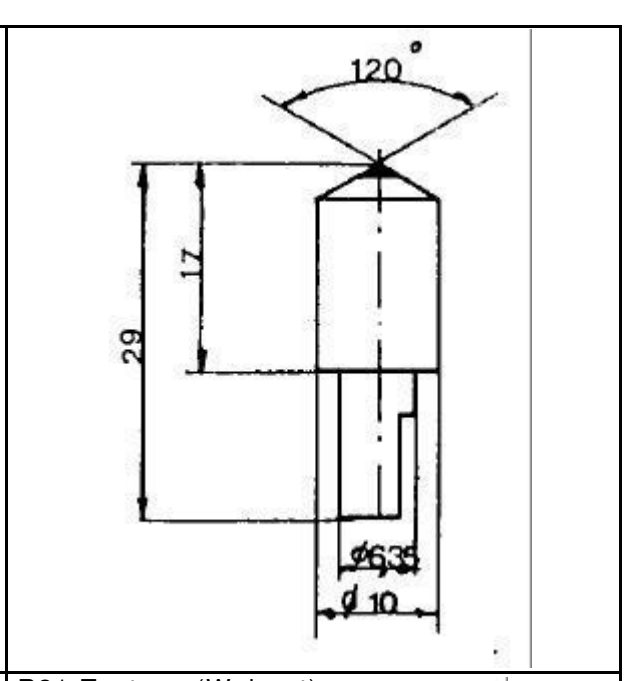

R21 Testor (Wolpert)

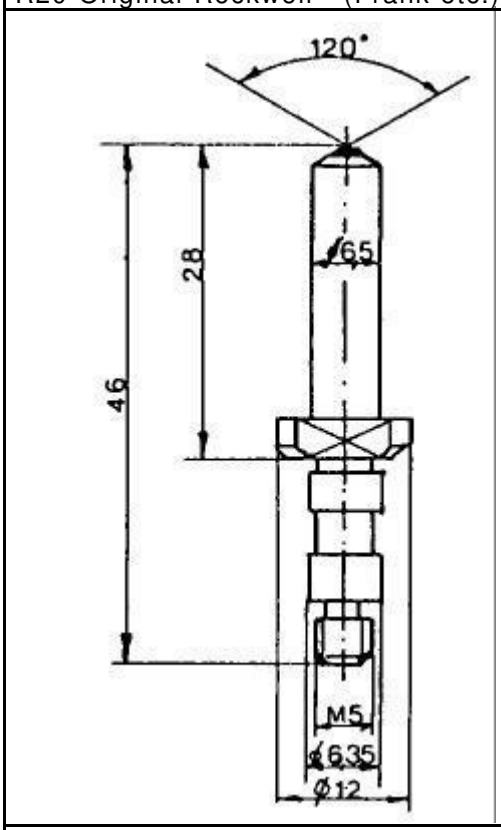

R22 Brio UVN (Reichert)

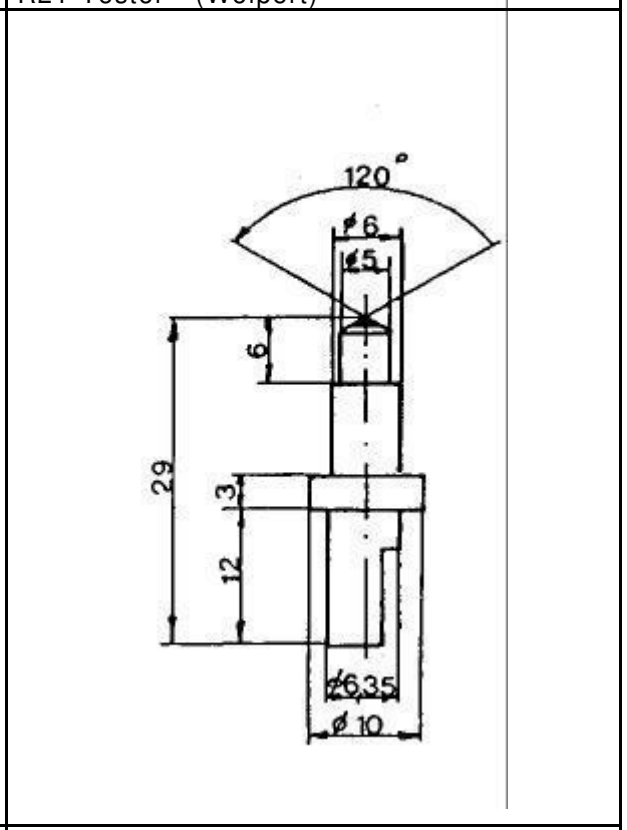

R23 Testor – Automat (Wolpert)

Rockwell DIN 50 103 cone 120° with R = 0,2 mm

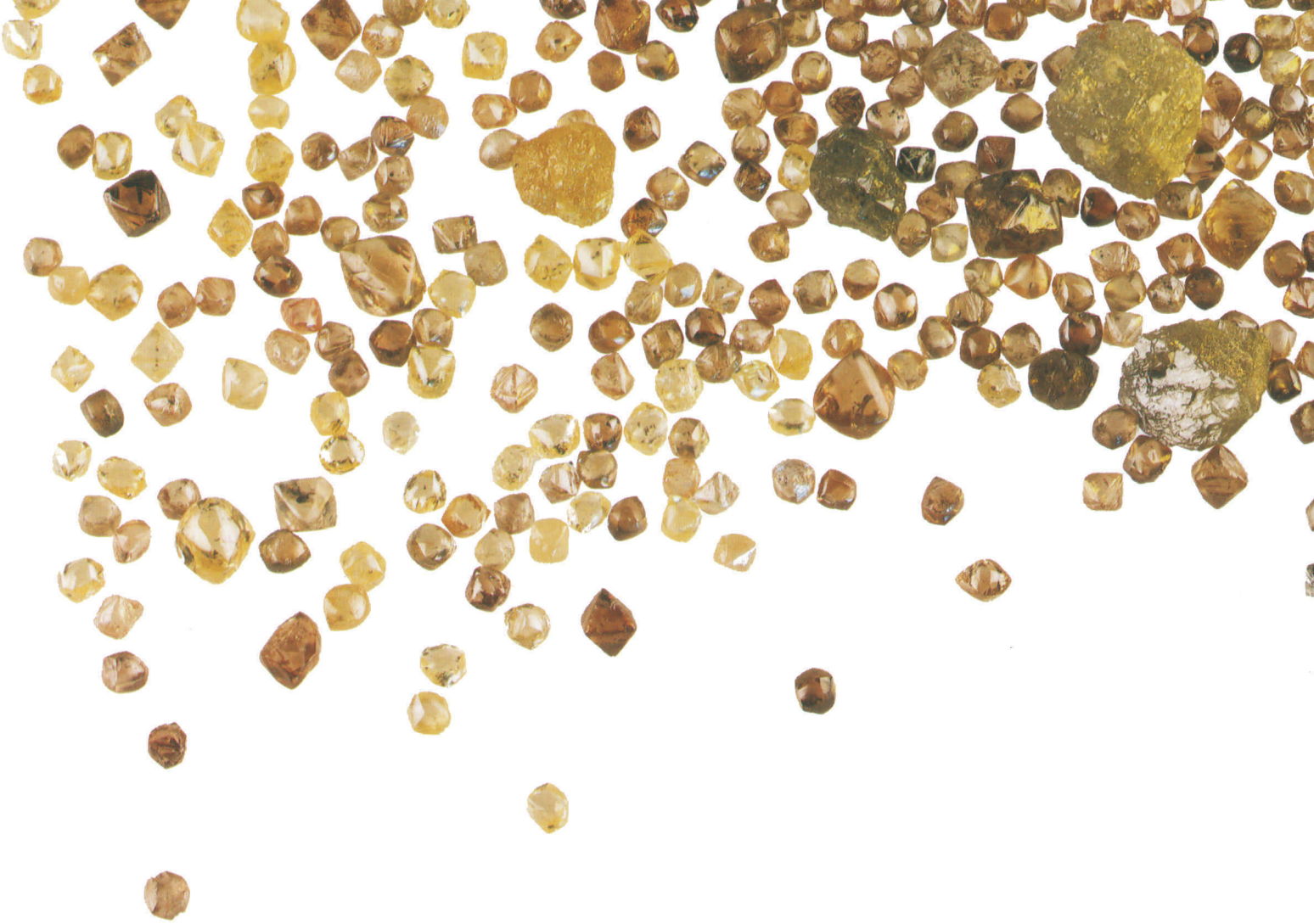

SUCO T
Tracer point diamonds made from natural diamonds
SUCO TAST
Tracer point diamonds made from PCD
Tracer point diamonds made from MONO

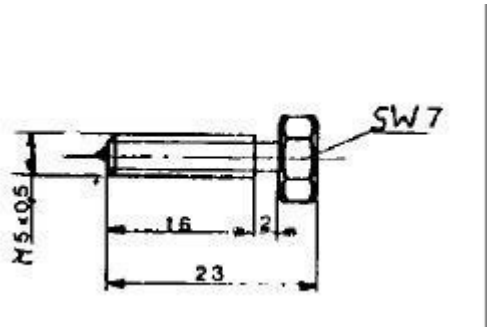

Order No. 70

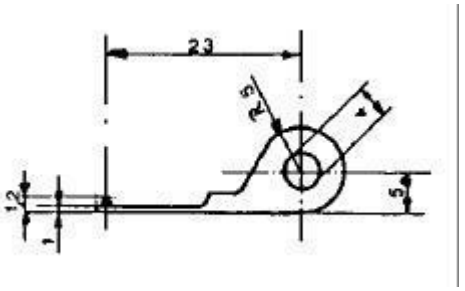

Order No. 71

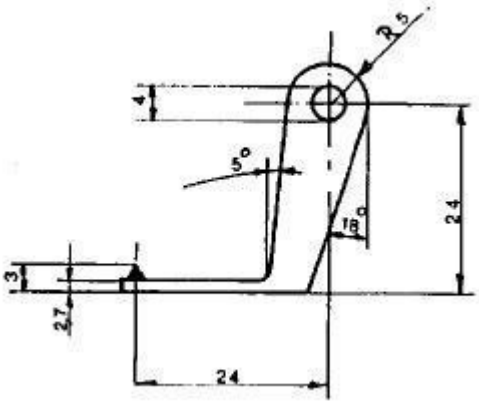

Order No. 72

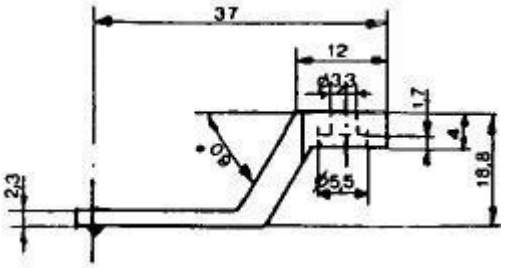

Order No. 73

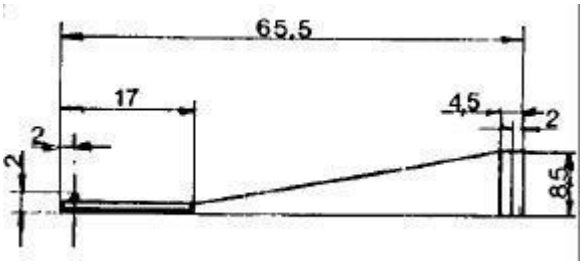

Order No. 74

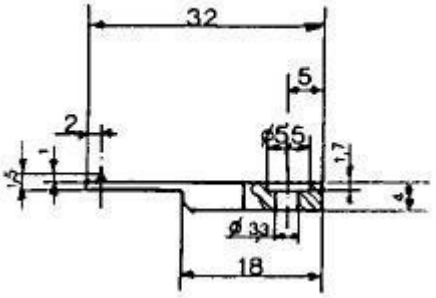

Order No. 75

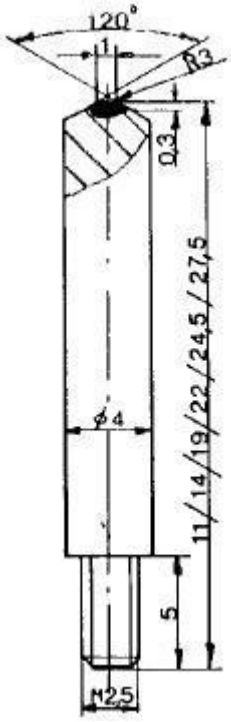

Order No. 50

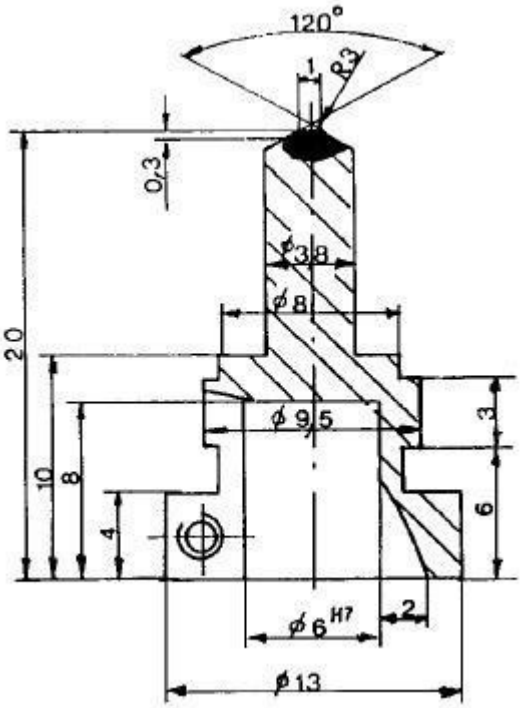

Order No. 51

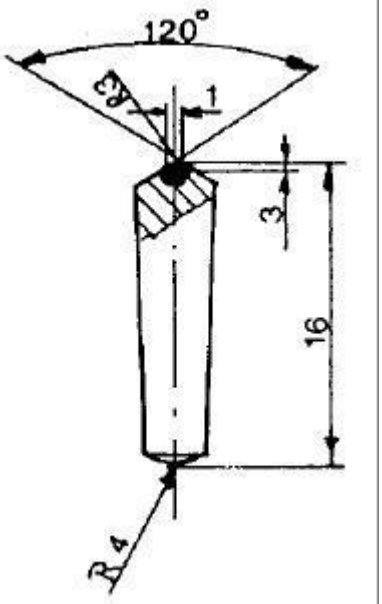

Order No. 52

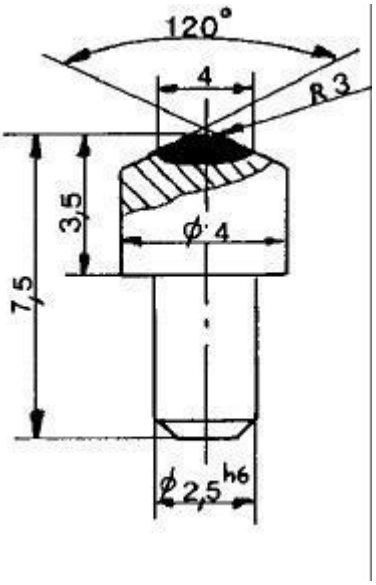

Order No. 53

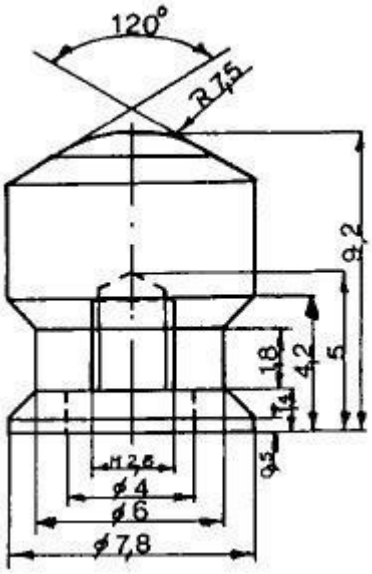

Order No. 54

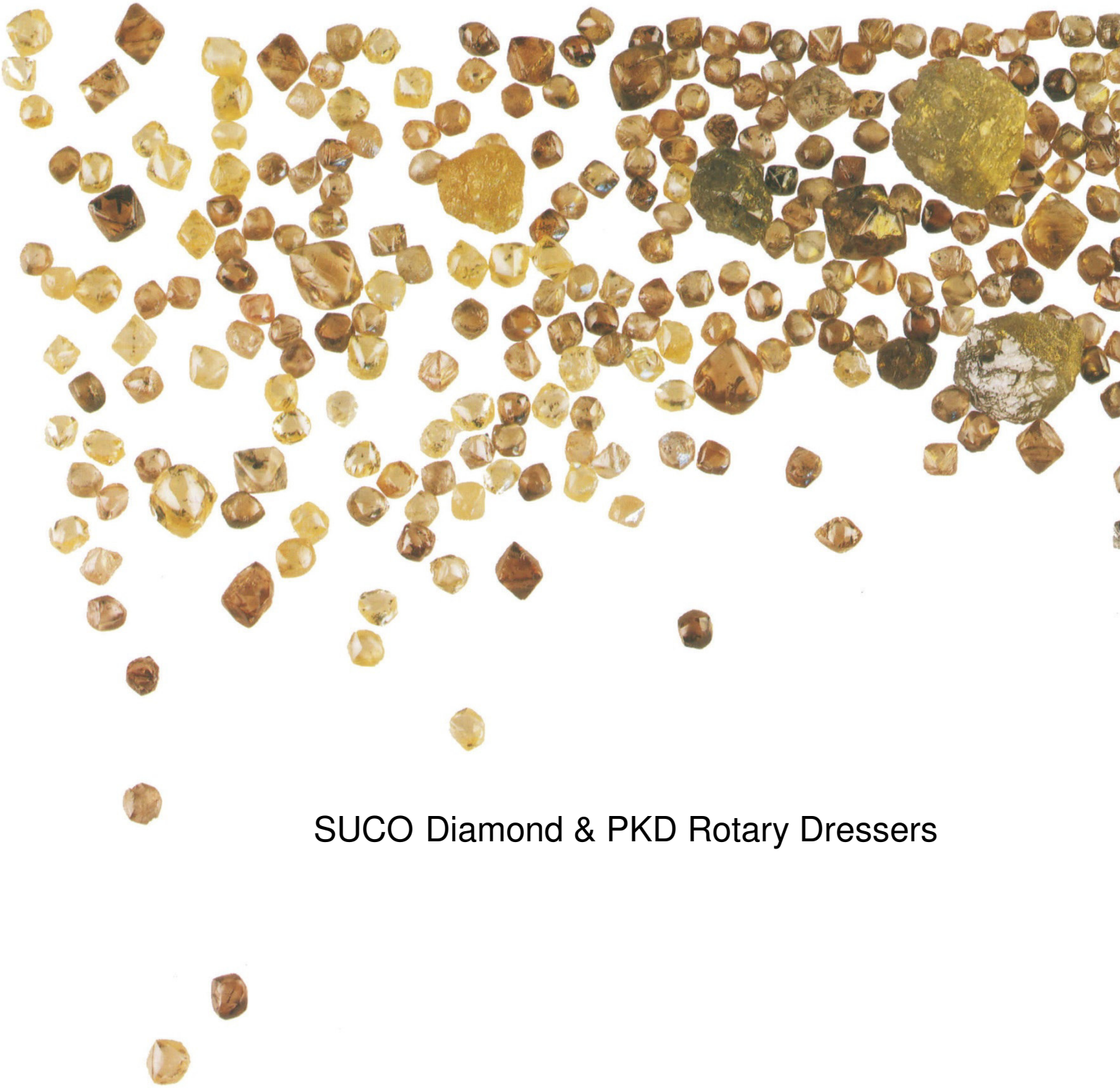

SUCO Diamond & PKD Rotary Dressers

SUCO Diamond & PKD Rotary Dressers

Economic and technological points of view and trends

The listed advantages of dressing with diamond rotary dressers caused especially in the industrial scale manufacture a fast breakthrough of this dressing method. A complete automation of the industrial scale manufacture partly became just increasing through the application of diamond rotary dressers:

- increasing of mass production
- lacking of skilled labour within series-production
- cumulative machine- and labour costs
- cumulative dressing frequency when grinding difficult remove material

Application course

- automobile industry (engine, transmission, chassis, steering)
- electrical industry
- airplane industry (drive, hydraulics)
- thread industry (fastening thread, cutting thread)
- gear cutting industry
- rolling-contact bearing industry (inside rings, outer rings, spring collets)

The smallest possible tolerances at diamond rotary dressers are obviously from the following listing:

Längenmaß	± 0,002 mm*
Stufenmaße	± 0,002 mm*
Winkel	± 1' (abhängig von der Schenkellänge)
Ebenheit	0,002 mm
Radien-Linienform (Querform)	0,002 mm
Radiengröße	+ 0,002 mm*
Rundlauf zu einer Fläche A	0,002 mm ↗ A
Zylinderform	0,002 mm ⌀

Rundlauf des gesamten Profils zur Aufnahmebohrung	0,004 mm ↗ Profil A
Durchmesser der Aufnahmebohrung	Toleranzklasse H 3
Rundlauf des gesamten Profils zum Meßzylinder	0,002 mm ↗ Profil MZ
Ebenheit der Anlagefläche	0,001 mm
Rechtwinkeligkeit der Anlagefläche zur Bohrung	0,002 mm ⊥ A
Planlauf der Anlagefläche zur Bohrung	0,002 mm ↗ A

*engere Toleranzen sind nach Absprache möglich

SUCO D
Diamond grinding tools
SUCO B
Boron nitride grinding tools

14/15.0

SUCO / BERLIN
D 91-C 100

SUCO / BERLIN
2-250-4-10-57 H7
D 91-C 100

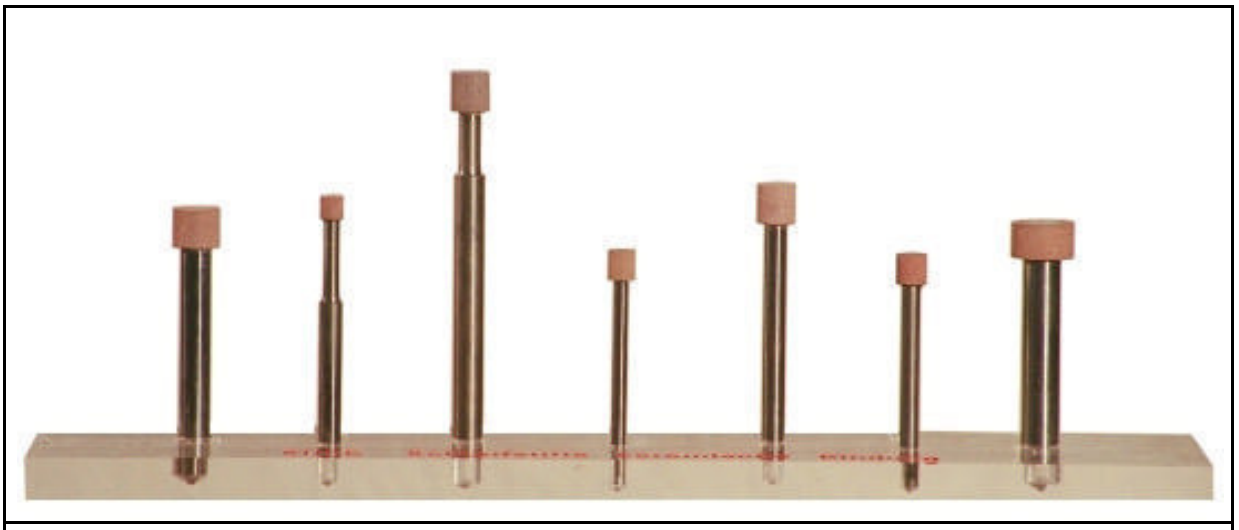

SUCO Grinding tools

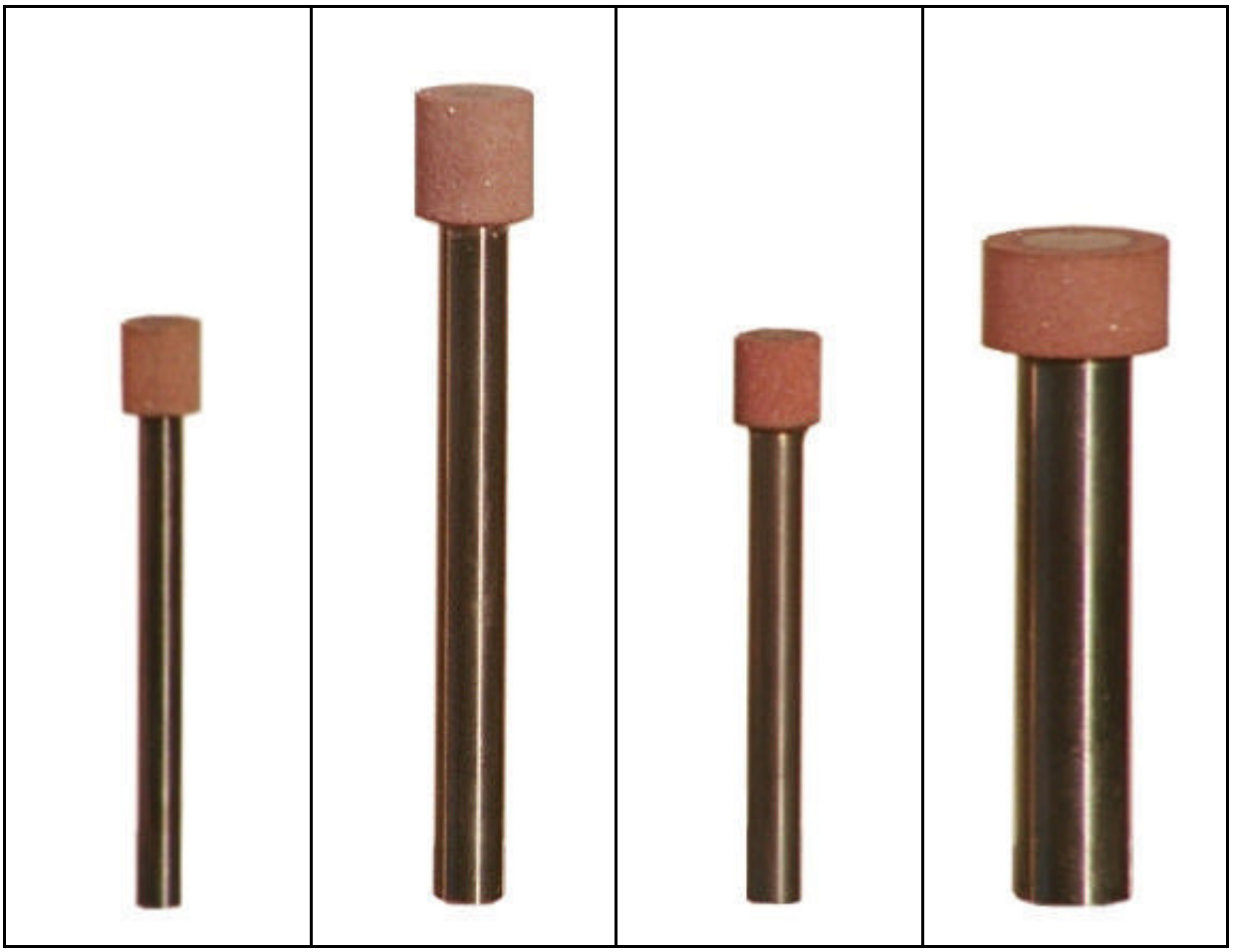

According to customer's specification

HOW TO ORDER:

1 item	SUCO D Diamond grinding wheels
___ item	SUCO B Borazon grinding wheels

DRY GRINDING / WET GRINDING

Type	:	1 A 1
Dimensions	:	100-20-3-32
Grain size	:	D 126
Concentration	:	C 75
Bond	:	K *or* M *or* V

Bond:	Resin	=	K
	Metal	=	M
	Vitrified	=	V

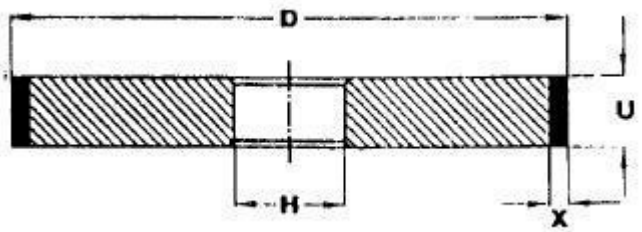

1A1

D	U	Metal Bond X	Resin Bond	H
20	4 6 8 10 12	1 2 3	2 3 4	Please state size required
25	4 6 8 10 12	1 2 3	2 3 4	
30	4 6 8 10 12	1 2 3	2 3 4	
40	4 6 8 10 12	1 2 3	2 3 4	
50	4 6 8 10 12	1 2 3	2 3 4	
75	5 6 8 10 12	1 2 3	2 3 4	
100	6 8 10 12	1 2 3	2 3 4	
125	8 10 12 15	1 2 3	2 3 4	
150	8 10 12 15	1 2 3	2 3 4	
175	8 10 12 15 20	1 2 3	2 3 4	
200	12 15 20 25 30	1 2 3	2 3 4	
225	12 15 20	1 2 3	2 3 4	
250 250	15 20 25 30 40 50 15 20 25 30	1.5 2 3	2 3 4	
300 300	15 20 25 30 40 50 15 20 25 30	1.5 2 3	2 3 4	
350 350	20 25 30 40 50 20 25 30	1.5 2 3	2 3 4	
400 400	25 30 40 50 25 30	1.5 2	2 3 4	
450	25 30 40 50		2 3 4	

Other dimensions available on request

3A1

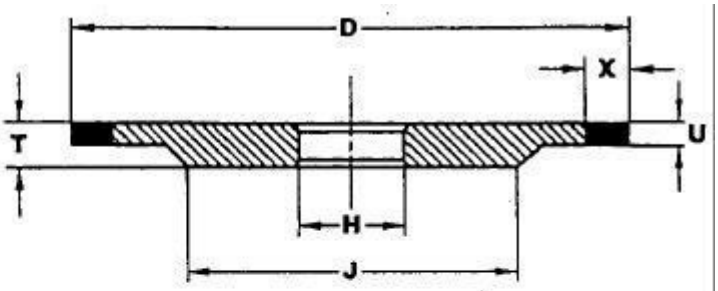

14A1

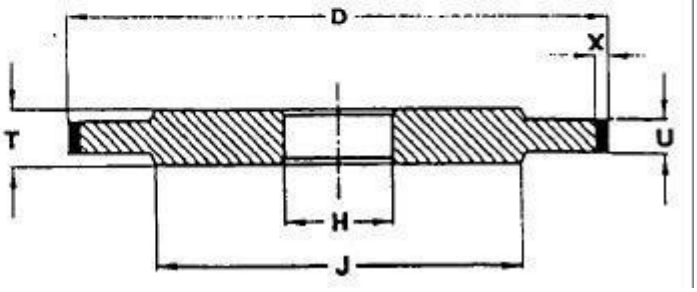

D	U	Metal Bond X	Resin Bond	H	T	J
75 75	1 2 3 4	3 6 1 2 3	3 6 2 3 4	Please state size required	6 6	50 50
100 100	1 2 3 4 5	3 6 1 2 3	3 6 2 3 4		6 6	80 70
125 125	1 2 3 4 5 6	3 6 1 2 3	3 6 2 3 4		7 7	105 100
150 150	1 2 3 4 5 6	3 6 1 2 3	3 6 2 3 4		8 8	130 120
175 175	1 2 3 4 5 6	3 6 1 2 3	3 6 2 3 4		10 10	150 140
200 200	1 2 3 4 5 6 8 10	6 1 2 3	6 2 3 4		12 12	175 160
250	6 8 10 12	1.5 2 3	2 3 4		15	200
300	8 10 12	1.5 2 3	2 3 4		15	250
350	10 12 15	1.5 2 3	2 3 4		20	300
400	10 12 15 20	1.5 2 3	2 3 4		25	350
450	10 12 15 20		2 3 4		25	400

Other dimensions available on request

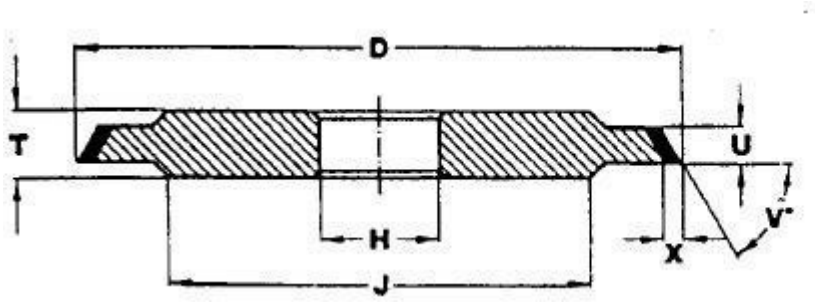

14V1

or

1V1

(without hub)

D	U	Metal Bond X	Resin Bond	V °	H	T	J
50 50	3 4 5 6 8					6	30
75 75	3 4 5 6 8 10					6	45
100 100	4 6 8 10					8	70
125 125	4 6 8 10	1 or	2 or	20 ° bis	**Please state size required**	8	100
150 150	4 6 8 10	2 or	3 or	89 °		8	120
175 175	4 6 8 10	3	4	When ordering please state degrees required		10	140
200 200	4 6 8 10 12 15					12	160
250 250	4 6 8 10 12 15 20					15	200
300 300	4 6 8 10 12 15 20					15	250

Other dimensions available on request

14U1

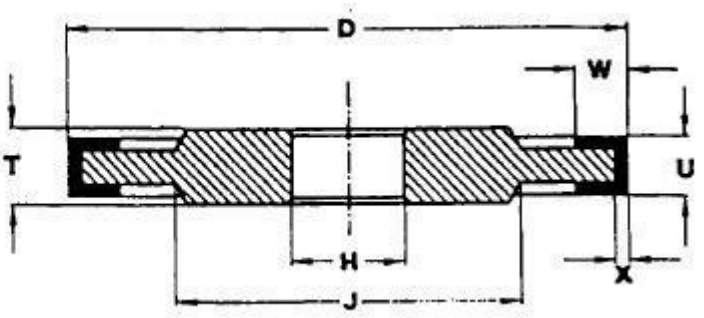

D	W	U	Metal Bond X	Resin Bond	H	T	J
100	6	6	1	2	Please state size required	8	60
100	6	8	1	2		10	60
100	6	10	1	2		12	60
125	6	6	1	2		8	80
125	6	8	1	2		10	80
125	6	10	1	2		12	80
150	6	6	1	2		8	100
150	6	8	1	2		10	100
150	6	10	1	2		12	100

Other dimensions available on request

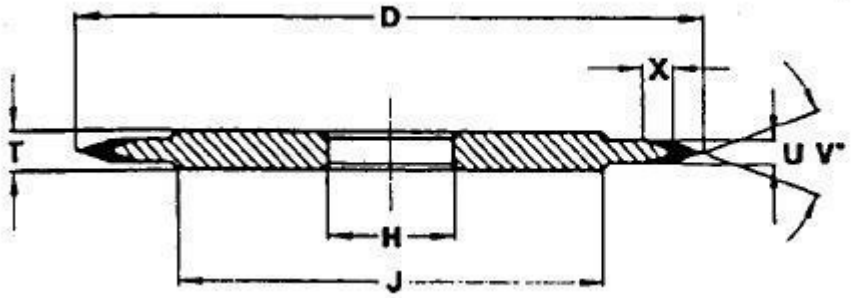

14EE1

D	U	X Metal Bond	X Resin Bond	V °	H	T	J
100	3 4	3	6	35	Please state size required	6	70
100	3 4	2.5	5	45		6	70
100	3 4	2	4	60		6	70
100	3 4	1.5	3	90		6	70
125	3 4	3	6	35		6	100
125	3 4	2.5	5	45		6	100
125	3 4	2	4	60		6	100
125	3 4	1.5	3	90		6	100
150	3 4	4	8	30		6	100
150	3 4	3	6	35		6	120
150	3 4	2.5	5	45		6	120
150	3 4	2	4	60		6	120
150	3 4	1.5	3	90			
175	4 5	3	6	35		8	140
175	4 5	2.5	5	45		8	140
175	4 5	2	4	60		8	140
175	4 5	1.5	3	90		8	140
200	5	3	6	35		10	160
200	5	2.5	5	45		10	160
200	5	2	4	60		10	160
200	5	1.5	3	90		10	160
250	5	3	6	35		15	200
250	5	2.5	5	45		15	200
250	5	2	4	60		15	200
250	5	1.5	3	90		15	200

Other dimensions available on request

1FF1

Siehe auch
Form 14F1

See also
shape 14F1

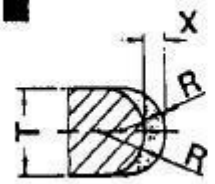

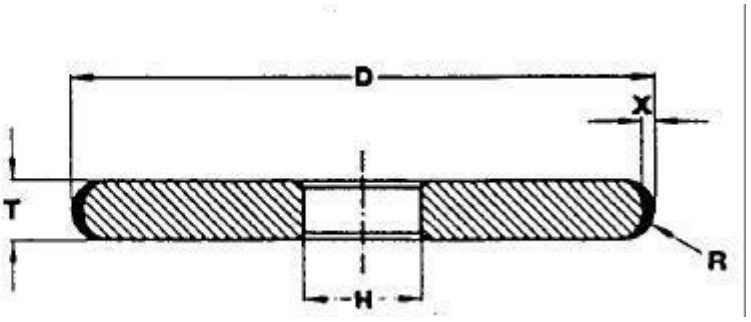

D	T	Metal Bond X	Resin Bond	R	H
50	6	1	2	3	Please state size required
50	8	1	2	4	
50	10	1	2	5	
75	6	1	2	3	
75	8	1	2	4	
75	10	1	2	5	
100	6	1	2	3	
100	8	1	2	4	
100	10	1	2	5	
100	12	1	2	6	
125	6	1	2	3	
125	8	1	2	4	
125	10	1	2	5	
125	12	1	2	6	
150	6	1	2	3	
150	8	1	2	4	
150	10	1	2	5	
150	12	1	2	6	

Other dimensions available on request

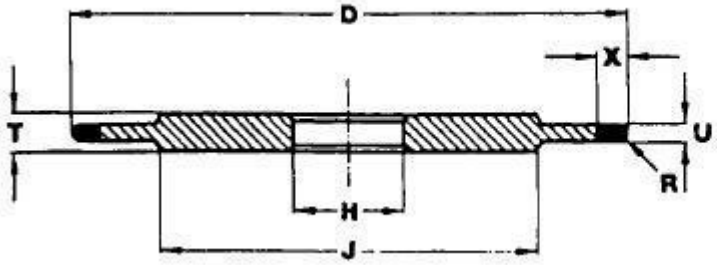

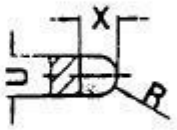

14F1

Siehe auch
Form 1FF1

See also
shape 1FF1

D	U	Metal/ Resin Bond	R	H	T	J
40	2	2.5 or 3 or 4 or 5 or 6	1	Please state size required	6	25
40	3		1.5		6	25
40	4		2		6	25
50	2		1		6	30
50	3		1.5		6	30
50	4		2		6	30
75	2		1		6	50
75	3		1.5		6	50
75	4		2		6	50
100	2		1		6	70
100	3		1.5		6	70
100	4		2		6	70
125	2		1		6	100
125	3		1.5		6	100
125	4		2		6	100
150	2		1		8	120
150	3		1.5		8	120
150	4		2		8	120

Other dimensions available on request

4A2
S=15°

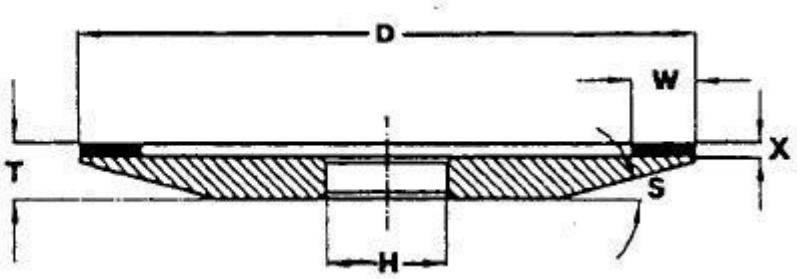

D	W	Metal Bond X	Resin Bond	H	T - X
50	3				5
50	3				5
75	3				5
75	5				5
100	3				6
100	4				6
100	5				6
100	6				6
100	8				6
100	10	2 or	3 or		6
125	3	3 or	4 or	Please state size required	7
125	4				7
125	5	4 or	5 or		7
125	6				7
125	8				7
125	10				7
150	3				9
150	4				9
150	5				9
150	6				9
150	8				9
150	10				9
150	12.5				9

Other dimensions available on request

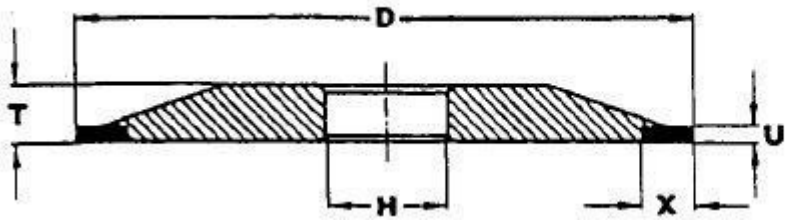

4A9

D	U	X Metal / Resin Bond	H	T
75	1 1.5 2 3	6	Please state size required	7
100	1 1.5 2 3	6		7
125	1 1.5 2 3	6 10		8
150	1 1.5 2 3	6 10		8

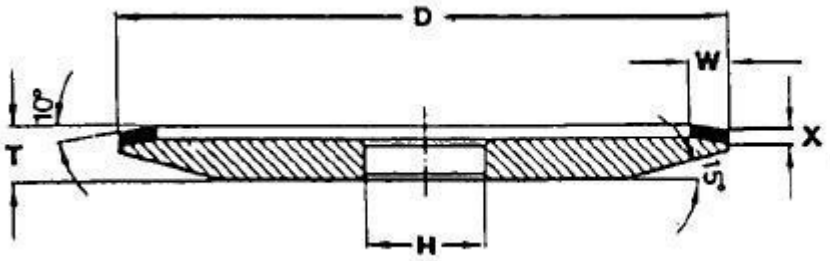

4V5

D	W	Resin X Bond	H	T
75 75 75	3 4 5	2 2 2	Please state size required	9 9 9
100 100 100 100	3 4 5 6	2 2 2 2		9 9 9 9
125 125 125	4 5 6	2 2 2		9 9 9

Other dimensions available on request.
This wheel shape is also available with a radius on the X dimension.
When ordering please submit your appropriate specifications.

4BT9

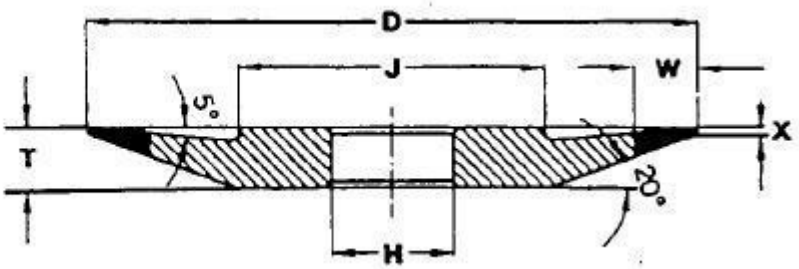

D	W	Metal Bond X	Resin Bond	H	T	J
45 45	4 6	1 1	1 1	Please state size required	5 5	22 22
60	6	1	1		8	22
75 75	6 10	1 1	1 1		8 8	36 36
80	6	1	1		8	42
100 100	6 10	1 1	1 1		10 10	50 50
125 125	6 10	1 1	1 1		12 12	65 65
150 150	6 10	1 1	1 1		15 15	80 80

Other dimensions available on request.
This wheel shape is also available with a radius on the x dimensions and a level leading surface without the 5 ° chamfer.
When ordering please submit your appropriate specifications.

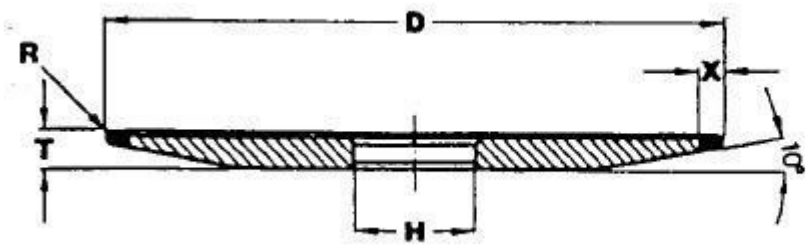

4F9

D	Metal Bond X	Resin Bond	R	H	T
75	4	4	1.0	Please state size required	8
100	4	4	1.0		8
125	4	4	1.0		8
150	4	4	1.0		10

Other dimensions available on request

6A2

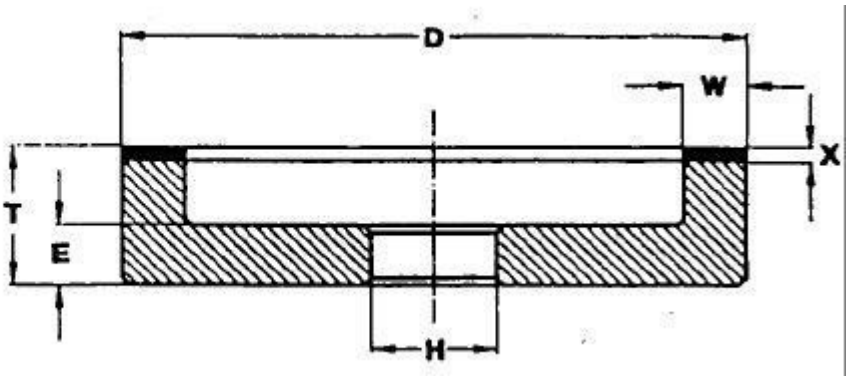

D	W	Metal Bond X	Resin Bond	H	T – X	E
50	3				20	8
50	5				20	8
75	3				20	10
75	5				20	10
75	10				20	10
100	5				20	10
100	8				20	10
100	10				20	10
100	12.5				20	10
100	15				20	10
125	4				23	10
125	6	1 or	2 or		23	10
125	8			**Please state size required**	23	10
125	10	2 or	3 or		23	10
125	12.5				23	10
125	15	3 or	4 or		23	10
125	20				23	10
125	25				23	10
150	6				23	10
150	8				23	10
150	10				23	10
150	12.5				23	10
150	15				23	10
150	20				23	10
150	25				23	10
175	6				25	13
175	10				25	13
175	15				25	13

Continued over page

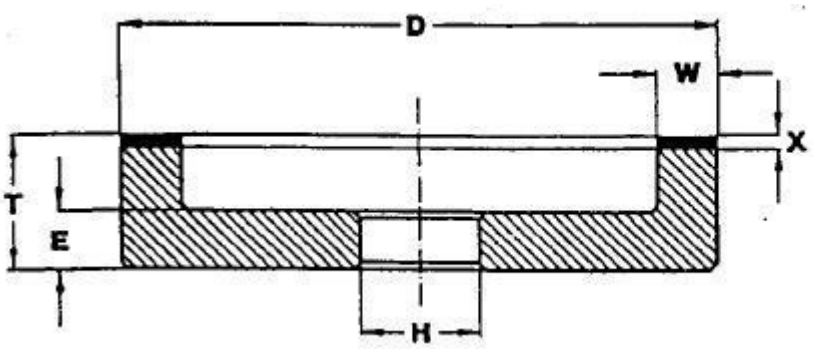

6A2

D	W	Metal Bond X	Resin Bond	H	T – X	E
175	20				25	13
175	25				25	13
175	30				25	13
175	35				25	13
200	5				25	13
200	6				25	13
200	10				25	13
200	15				25	13
200	20				25	13
200	25				25	13
200	30	1 or	2 or		25	13
220	8			Please state size required	Specifications to order	
220	12	2 or	3 or			
220	10	3 or	4 or			
300	6				25	13
300	10				25	13
300	20				25	13
300	25				25	13
350	6				Specifications to order	
350	87					
350	10					
350	12					
350	15					
350	25					

Other dimensions available on request

6A9

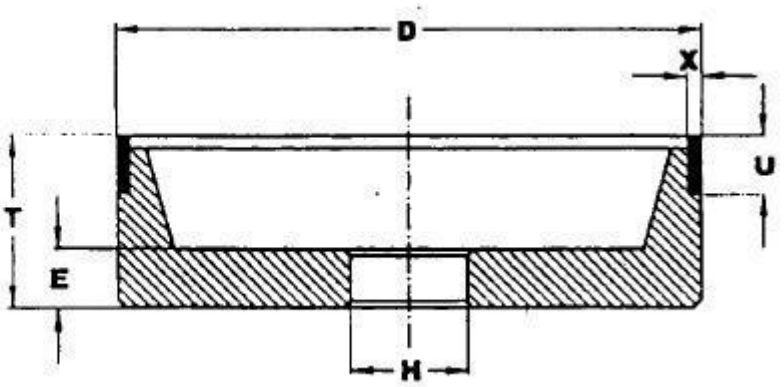

D	Metal/ Resin Bond X	U	H	T	E
75	1.5	6	Please state size required	25	10
75	1.5	10		25	10
75	2	6		25	10
75	2	10		25	10
75	3	6		25	10
75	3	10		25	10
100	1.5	6		30	10
100	1.5	10		30	10
100	2	6		30	10
100	2	10		30	10
100	3	6		30	10
100	3	10		30	10
125	1.5	6		30	10
125	1.5	10		30	10
125	2	6		30	10
125	2	10		30	10
125	3	6		30	10
125	3	10		30	10
150	1.5	6		35	10
150	1.5	10		35	10
150	2	6		35	10
150	2	10		35	10
150	3	6		35	10
150	3	10		35	10

Other dimensions available on request

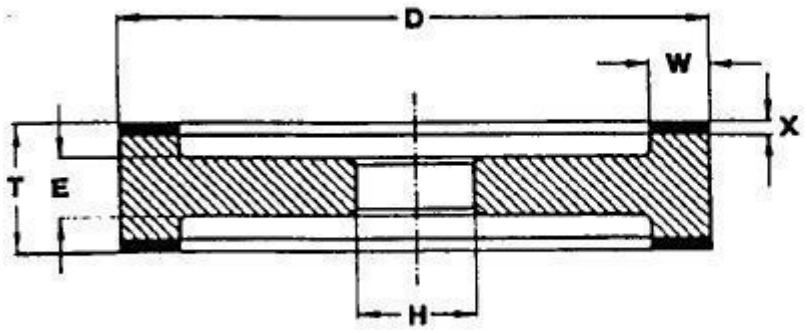

9A3

D	W	Metal Bond X	Resin Bond	E	H	T
100 100 100	6 8 10	1 or 2	2 or 3	22 22 22	Please state size required	10 10 10
125 125 125	6 8 10			22 22 22		10 10 10
150 150 150 150 150 150	3 4 6 8 10 15			14 25 or 35 25 or 35 25 or 35 25 or 35 25 or 35		8 14 14 14 14 14
175 175 175 175 175 175	3 4 6 8 10 15			25 or 35 25 or 35 25 or 35 25 or 35 25 or 35 25 or 35		14 14 14 14 14 14
200 200 200	8 10 15			30 30 30		18 18 18

Other dimensions available on request

11A2

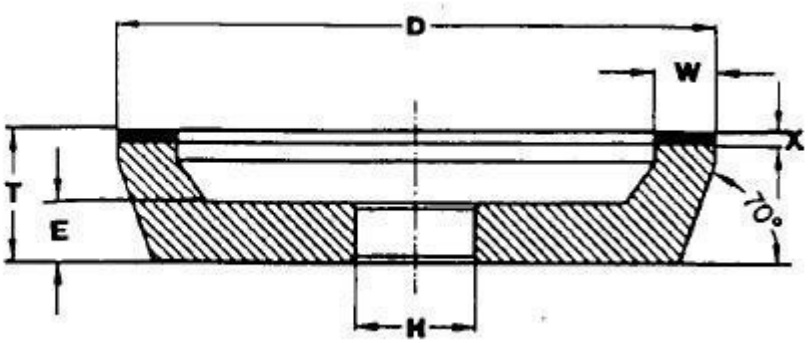

D	W	Metal Bond X	Resin Bond	H	T – X	E
50	3				20	8
50	5				20	8
75	3				20	10
75	6				20	10
75	10				20	10
100	6				20	10
100	8	1 or	2 or		20	10
100	10				20	10
		2 or	3 or	Please state size required		
125	6				23	10
125	8	3 or	4 or		23	10
125	10				23	10
125	12.5				23	10
125	15				23	10
150	6				23	10
150	8				23	10
150	10				23	10
150	12.5				23	10
150	15				23	10

Other dimensions available on request

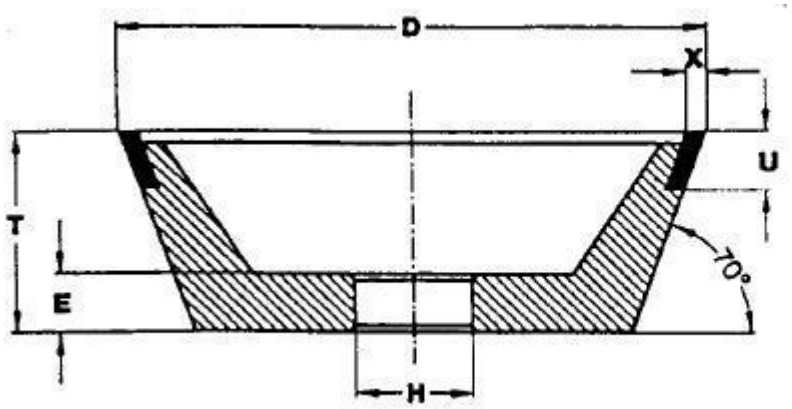

11V9

D	Metal/ Resin Bond X	U	H	T	E
50	2	6	Please state size required	30	10
50	2	10		30	10
75	1.5	6		30	10
75	1.5	10		30	10
75	2	6		30	10
75	2	10		30	10
75	3	6		30	10
75	3	10		30	10
100	1.5	6		35	10
100	1.5	10		35	10
100	2	6		35	10
100	2	10		35	10
100	3	6		35	10
100	3	10		35	10
125	1.5	6		40	10
125	1.5	10		40	10
125	2	6		40	10
125	2	10		40	10
125	3	6		40	10
125	3	10		40	10
150	1.5	6		50	10
150	1.5	10		50	10
150	2	6		50	10
150	2	10		50	10
150	3	6		50	10
150	3	10		50	10

Other dimensions available on request

12V9

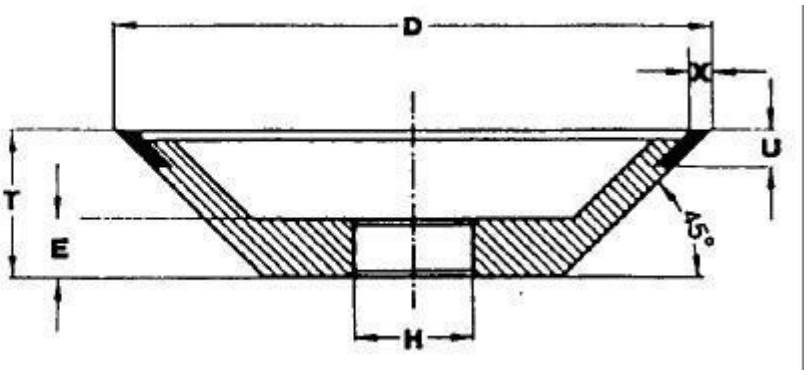

D	Metal/ Resin Bond X	U	H	T	E
50	2	6	Please state size required	20	10
75	1.5	6		20	10
75	2	6		20	10
75	3	6		20	10
100	1.5	6		20	10
100	1.5	10		20	10
100	2	6		20	10
100	2	10		20	10
100	3	6		20	10
100	3	10		20	10
125	1.5	6		25	10
125	1.5	10		25	10
125	2	6		25	10
125	2	10		25	10
125	3	6		25	10
125	3	10		25	10
150	2	6		25	10
150	2	10		25	10
150	3	6		25	10
150	3	10		25	10

Other dimensions available on request

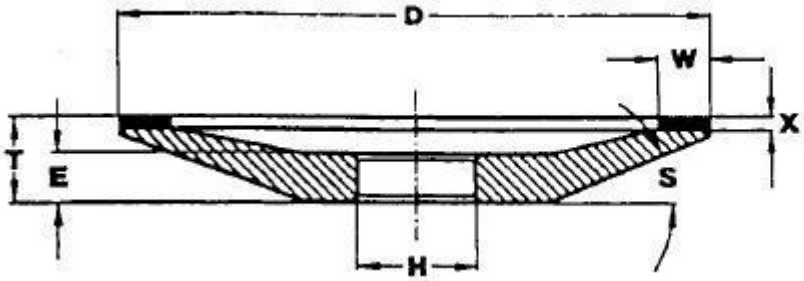

12A2
S=20°

D	W	Metal Bond X	Resin Bond	H	T – X	E
75	3				8	5
75	5				8	5
75	6				8	5
75	8				8	5
75	10				8	5
100	3				10	6
100	5				10	6
100	6				10	6
100	8				10	6
100	10				10	6
125	5	1 or	2 or		14	8
125	6			Please state size required	14	8
125	8	2 or	3 or		14	8
125	10				14	8
		3 or	4 or			
150	5				16	9
150	6				16	9
150	8				16	9
150	10				16	9
175	6				18	10
175	10				18	10
200	6				20	11
200	10				20	11
250	6				23	13
250	10				23	13

Other dimensions available on request

12A2
S = 45°

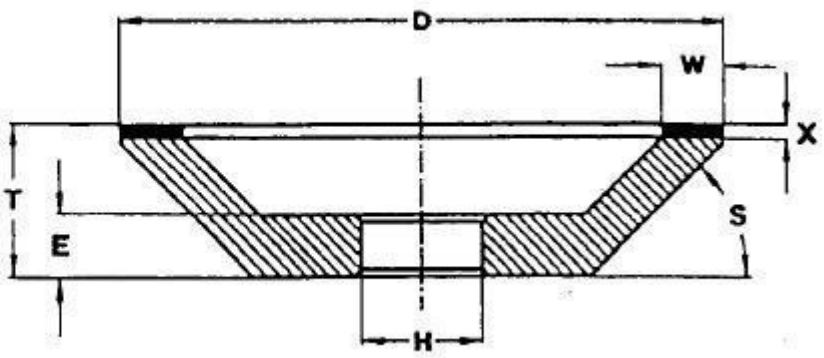

D	W	Metal Bond X	Resin Bond	H	T – X	E
50	3				15	8
50	6				15	8
75	3				20	9
75	6				20	9
75	10				20	9
100	3				23	10
100	6				23	10
100	8				23	10
100	10				23	10
125	5	1 or	2 or	Please state size required	23	10
125	6				23	10
125	8	2 or	3 or		23	10
125	10				23	10
125	12.5	3 or	4 or		23	10
125	15				23	10
150	6				23	10
150	8				23	10
150	10				23	10
150	12.5				23	10
150	15				23	10
175	6				25	12
175	10				25	12
175	12.5				25	12
175	15				25	12

Other dimensions available on request

SUCODIA

Turning and milling tools made from monocristalline natural diamond

SUCOPAX

Turning and milling tools made from mono- or polycrystalline synthetic diamond

SUCODBLOCK

Turning and milling tools made from polycrystalline cubic boron nitride

16-18/0

SUCOPAX ... with holder

According to customer's specification

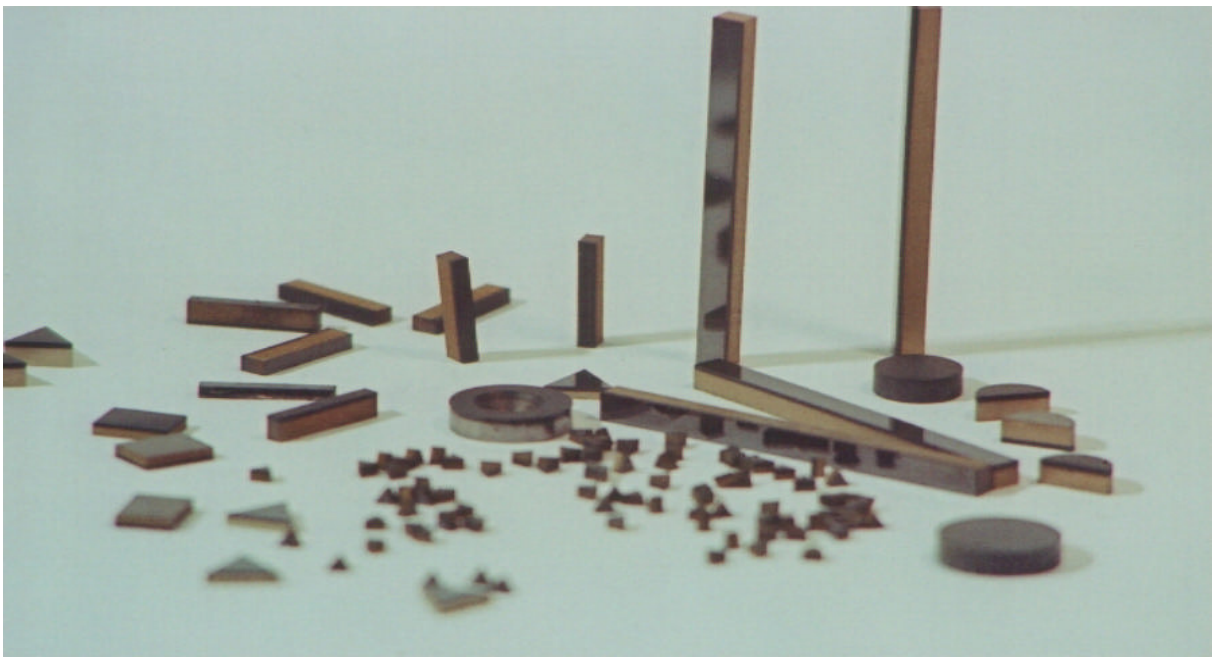

Turning tools with PCD diamond cutting edges

Technical data / Workpiece	Cutting speed [m/min]	Infeed [mm/min]	Depth of cut [mm]
Aluminium alloys Al-Si-alloys Magnesium alloys	300 to 1000	0.04 to 0.5	0.05 to 0.25
Copper Bronze Brass Argentan	150 to 400	0.05 to 0.5	0.1 to 1.5
Zink- und Zinnleg	300 to 900	0.05 to 0.5	0.05 to 0.3
Tungsten carbide [unsinte-red] Tungsten carbid	150 to 400	0.05 to 0.2	0.1 to 3.0
Gold Sliver Platinum	500 to 1000	0.05 to 0.6	0.01 to 0.2
Duro- and Thermoplastic with and without fillers	200 to 600	0.5 to 0.25	0.1 to 4.0
Rubber	200 to 400	0.5 to 0.25	0.1 to 1.0
Graphite	200 to 600	0.1 to 0.5	0.1 to 2.0

Milling tools with PCD diamond cutting edges

Technical data / Workpiece	Cutting speed [m/min]	Infeed [mm/tooth]	Depth of cut [mm]
Aluminium alloys Al-Si-alloys	400 to 2000	0.05 to 0.2	0.2 to 0.3
Copper Brass	200 to 700	0.05 to 0.5	0.2 to 3.0
Duro- and Thermoplastic with and without fillers	400 to 2000	0.1 to 1.5	0.1 to 2.5
Tungsten carbide [uninser-ted] Ceramic [uninserted]	200 to 800	0.05 to 0.15	0.1 to 0.2
Artificial carbon	300 to 1500	0.05 to 0.2	0.1 to 0.4
Graphite	300 to 1500	0.05 to 0.2	0.1 to 0.4

Turning tools with ***CBN*** cutting edges

Technical Data / Workpiece	Hardness [HRC]	Cutting speed [m/min]	Infeed [mm/min]	Depth of cut [mm]
Hardened steel	45 – 67	50 – 100	0.1 – 0.25	0.05 – 2.5
Cast iron	45 – 60	30 – 80	0.1 – 0.40	0.1 – 5.0
Spray-on alloys - Nickel-based - Cobalt-based - Iron-based	35 – 55	40 – 100	0.1 – 0.25	0.1 – 1.0
Grey cast iron	250HB	400 – 1000	0.05 – 0.25	0.05 – 2.0

Milling tools with ***CBN*** cutting edges

Technical data / Workpiece	Hardness [HRC]	Cutting speed [m/min]	Infeed [mm/tooth]	Depth of cut [mm]
Cast iron	45 – 60	200 – 300	0.05 – 0.25	0.05 – 2.5
Spray-on alloys	35 – 55	100 – 200	0.05 – 0.25	0.05 – 2.0

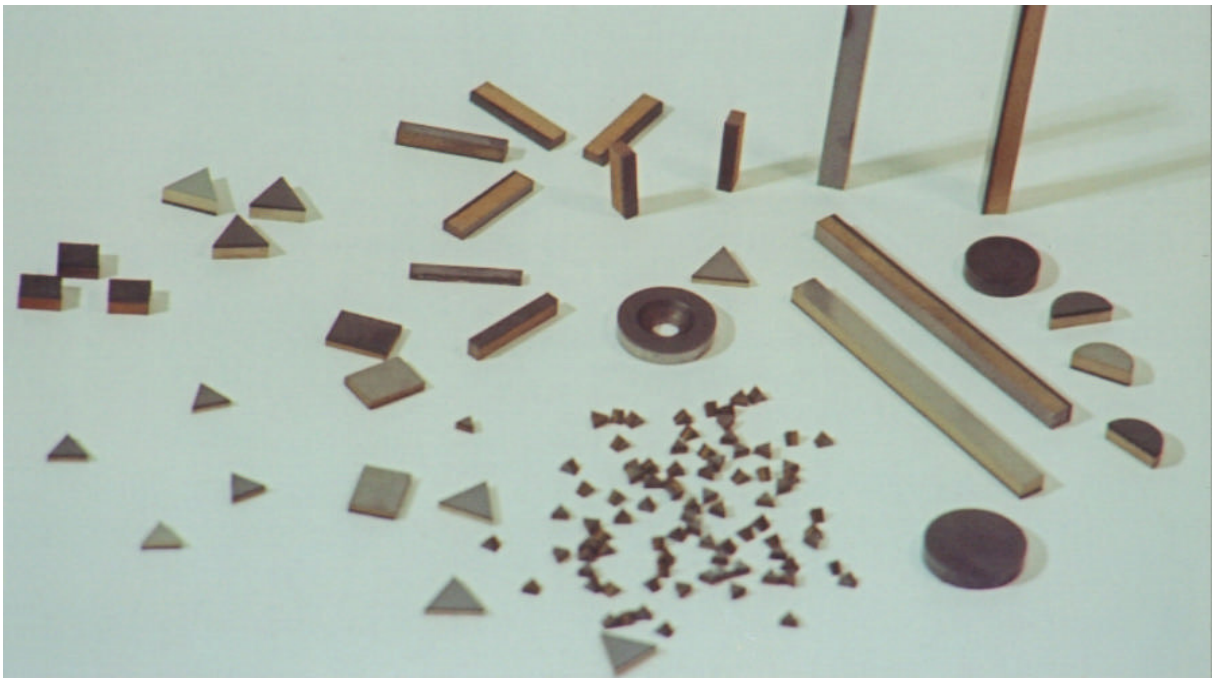

ISO Nomenclature of indexable inserts

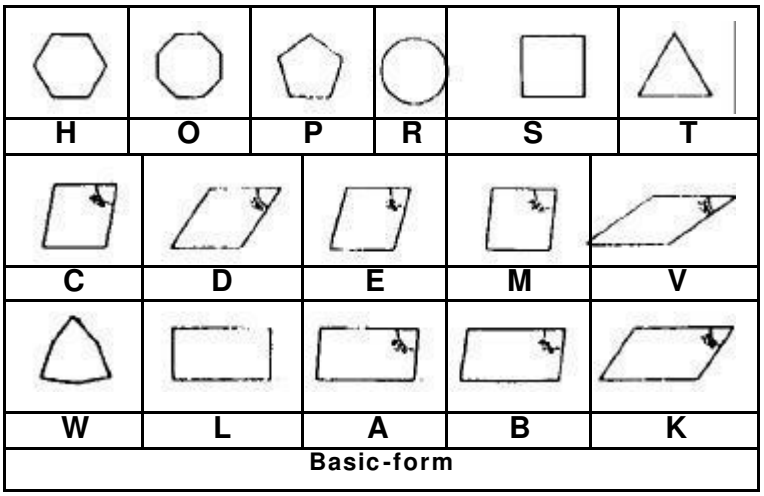

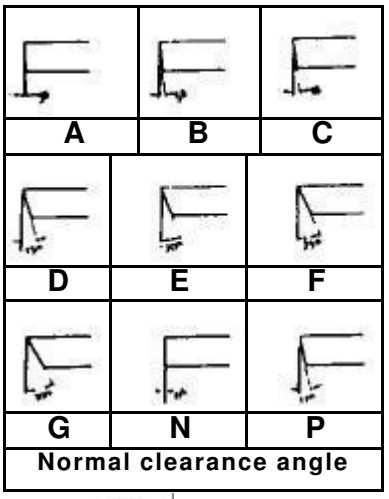

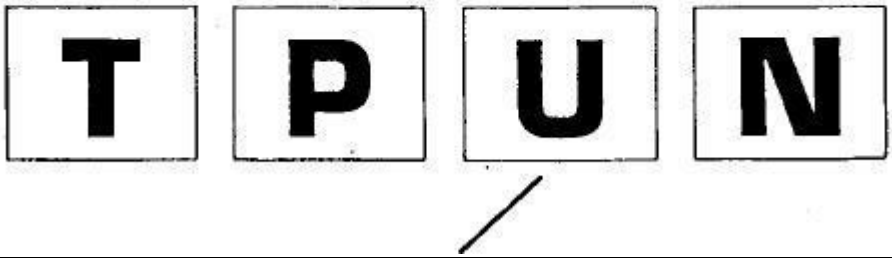

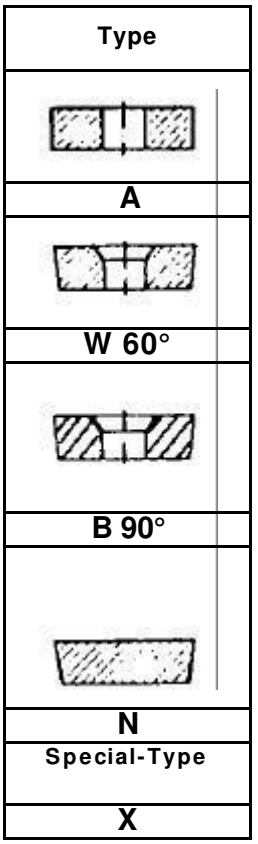

Tolerance classification

Tolerance

Tolerance in millimeter				Tolerance in millimeter				
					m	s	d	
	m	s	d		von ± to ±		von ± to ±	
A	± 0.005	± 0.025	± 0.025	J	± 0.005	± 0.025	0.05 - 0.13	
F	± 0.005	± 0.025	± 0.013	K	± 0.013	± 0.025	0.05 - 0.13	
C	± 0.013	± 0.025	± 0.025	L	± 0.025	± 0.025	0.05 - 0.13	
H	± 0.013	± 0.025	± 0.013	M	0.08 - 0.18	± 0.13	0.05 - 0.13	
E	± 0.025	± 0.025	± 0.025	U	0.13 - 0.38	± 0.10	0.08 - 0.25	
G	± 0.025	± 0.013	± 0.025					

ISO Nomenclature of indexable inserts

Length of cutting edge

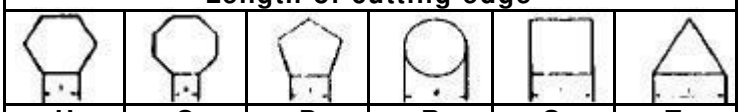

H	O	P	R	S	T

C, D, E, M, V	L	A, B, K

Thickness (mm)

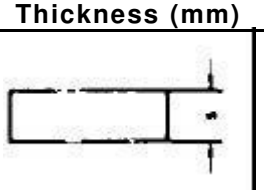

01		1.59
02	s =	2.38
03		3.18
T3	s =	3.91
04		4.76
06		6.35
08		8.00

16 01 08 R

Length of cutting edge

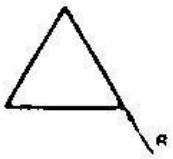

Radius
in 1/10 mm

00 round inserts

01	0.1 mm
02	0.2 mm
04	0.4 mm
08	0.8 mm
12	1.2 mm
16	1.6 mm
24	2.4 mm
32	3.2 mm
40	4.0 mm

Cutting direction

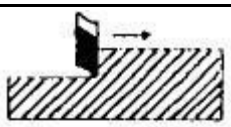

R

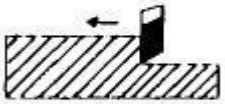

L

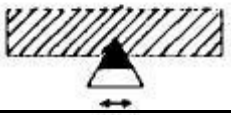

N

ISO Nomenclature of indexable inserts

SNMN

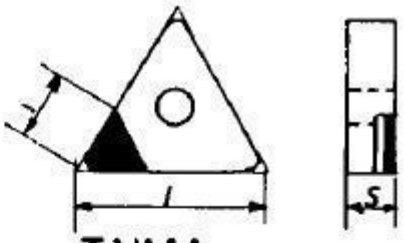

TNMA

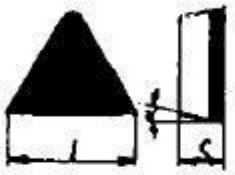

TPUN

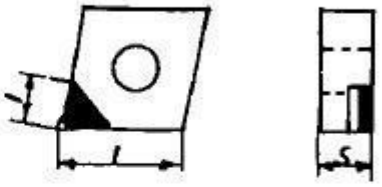

CNMA

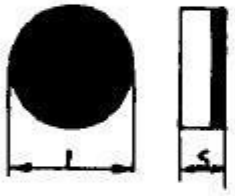

RNMN

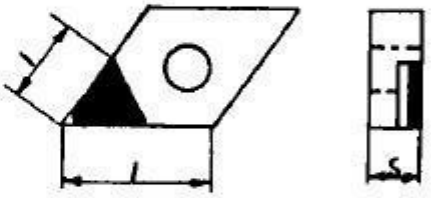

DNUA

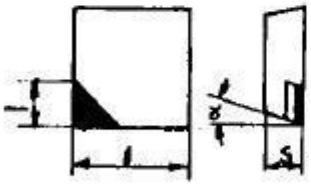

SCMN

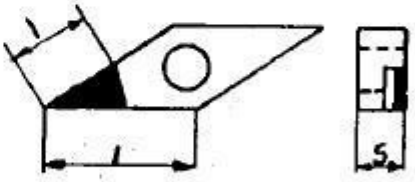

VNMA

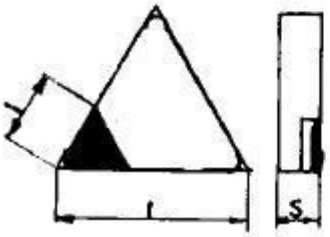

TNMN

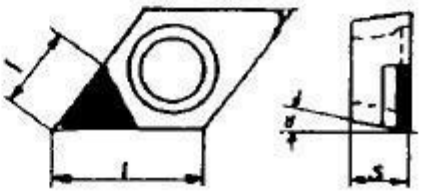

DCMW

Grinding forms for turning-, drilling- and milling tools

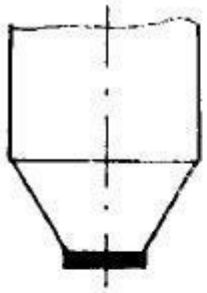	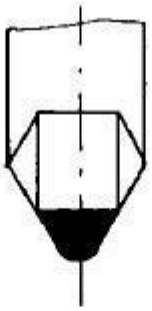	
Straight cutting edge	Angular cutting edge	Turning tool cutting edge
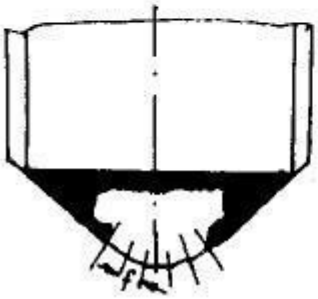	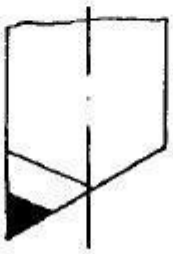	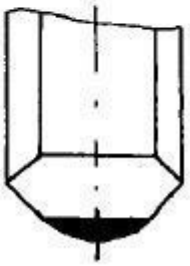
Facetted cutting edge	Internal turning tool cutting edge	Radial cutting edge

Gloss turning tools

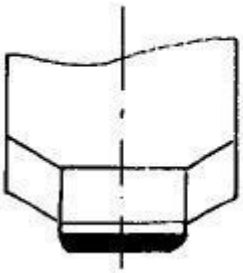	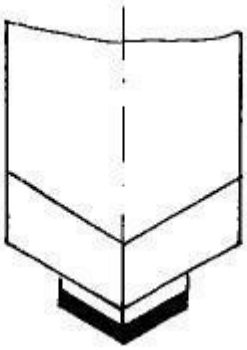	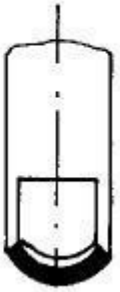
Straight cutting edge	Angular cutting edge	Radial cutting edge

Examples of holders for turning and milling tools

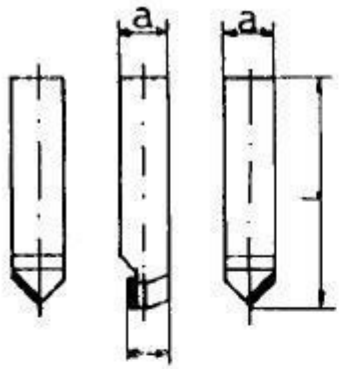	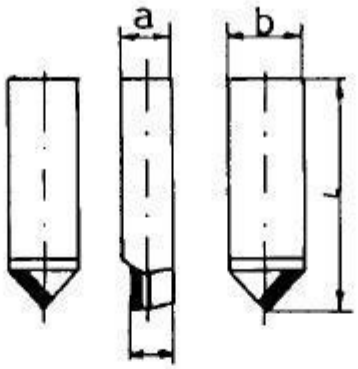	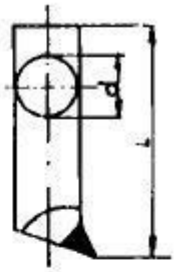
Square holder	Rectangular holder	Round holder
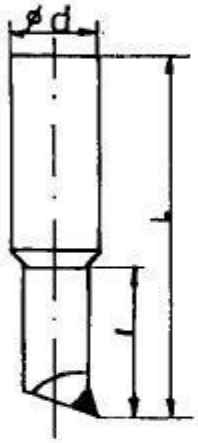	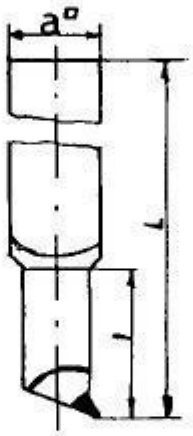	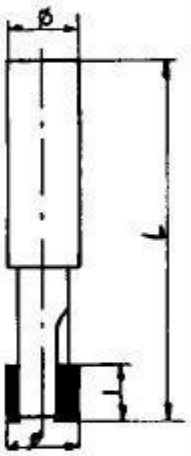
Internal turning tool with Round holder	Internal turning tool with Square holder	Shank mill, double-edged
	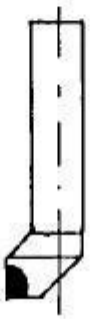	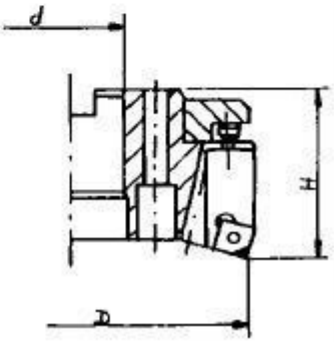
Right-hand turning tool	Left-hand turning tool	Milling head

SUCO Expansion shanks

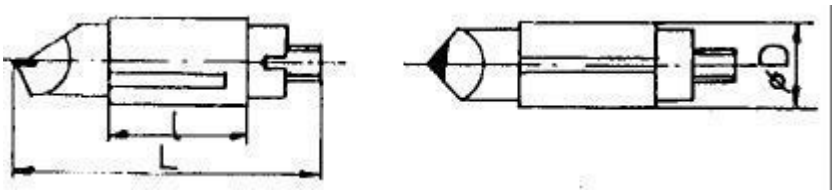

Order-No.	D	L	i
40	3	9.5	3.5
41	4	10.8	5.0
42	6	17.0	8.0
43	8	25.5	12.0
44	10	34.0	16.0
45	12	40.0	18.0

SUCO Cylinder shanks

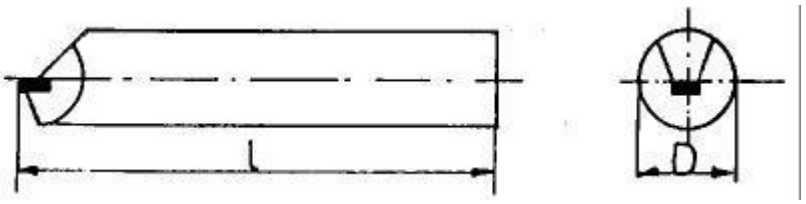

Order-No.	D	l
60	5	20
61	6	30
62	8	40
63	10	60
64	12	60
65	14	80

Other dimensions on request or according to customer's specification.

All holders are available as cylindrical, rectangular or square types according to your drawings and specifications.

SUCO - Ihr Lieferant für original
Feinbohreinheiten (Stand 2006)

Werkzeugaufnahmen/ *Adapter* (ABS®, Mod-Flex, WFU®)

HSK-A Kegel/ *HSK-A Taper*
Shaft DIN 69893

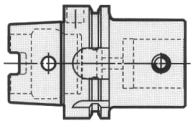

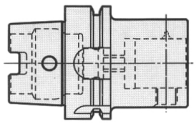

ABS®	EURO
HSK-A50-ABS 25-50	200,00
HSK-A50-ABS 32-50	200,00
HSK-A50-ABS 40-60	200,00
HSK-A50-ABS 50-70	205,00
HSK-A63-ABS 25-50	214,00
HSK-A63-ABS 32-50	214,00
HSK-A63-ABS 40-60	216,00
HSK-A63-ABS 50-70	222,00
HSK-A63-ABS 63-80	226,00
HSK-A63-ABS 80-80	241,00
HSK-A100-ABS 25-60	259,00
HSK-A100-ABS 32-60	259,00
HSK-A100-ABS 40-80	262,00
HSK-A100-ABS 50-80	268,00
HSK-A100-ABS 63-80	275,00
HSK-A100-ABS 80-90	289,00
HSK-A100-ABS 100-100	303,00

Mod-Flex	EURO
HSK-A50-MF 25-50	130,00
HSK-A50-MF 32-50	130,00
HSK-A50-MF 40-60	130,00
HSK-A50-MF 50-70	133,00
HSK-A63-MF 25-50	139,00
HSK-A63-MF 32-50	139,00
HSK-A63-MF 40-60	140,00
HSK-A63-MF 50-70	144,00
HSK-A63-MF 63-80	147,00
HSK-A63-MF 80-80	157,00
HSK-A100-MF 25-60	168,00
HSK-A100-MF 32-60	168,00
HSK-A100-MF 40-80	170,00
HSK-A100-MF 50-80	174,00
HSK-A100-MF 63-80	179,00
HSK-A100-MF 80-90	188,00
HSK-A100-MF 100-100	197,00

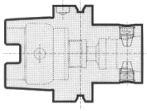

WFU®	EURO
HSK-A50-WFU 24-50	138,00
HSK-A50-WFU 32-50	138,00
HSK-A50-WFU 40-60	138,00
HSK-A50-WFU 50-65	140,00
HSK-A63-WFU 63-80	142,00
HSK-A63-WFU 24-50	144,00
HSK-A63-WFU 32-50	144,00
HSK-A63-WFU 40-55	144,00
HSK-A63-WFU 50-65	146,00
HSK-A63-WFU 63-70	148,00
HSK-A100-WFU 24-60	168,00
HSK-A100-WFU 32-60	168,00
HSK-A100-WFU 40-60	168,00
HSK-A100-WFU 50-70	168,00
HSK-A100-WFU 63-75	168,00
HSK-A100-WFU 80-75	172,00

Werkzeugaufnahmen/ *Adapter* (ABS®, Mod-Flex)

Shaft DIN 69871
Form AD

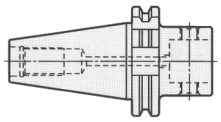

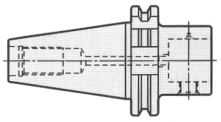

ABS®	EURO
GID40M-ABS 25-50	197,00
GID40M-ABS 32-50	197,00
GID40M-ABS 40-50	197,00
GID40M-ABS 50-50	197,00
GID40M-ABS 63-90	200,00
GID50M-ABS 32-60	224,00
GID50M-ABS 40-60	224,00
GID50M-ABS 50-60	224,00
GID50M-ABS 63-60	226,00
GID50M-ABS 80-70	233,00

Mod-Flex	EURO
GID40M-MF 25-50	118,00
GID40M-MF 32-50	118,00
GID40M-MF 40-50	118,00
GID40M-MF 50-50	118,00
GID40M-MF 63-90	120,00
GID50M-MF 32-60	134,00
GID50M-MF 40-60	134,00
GID50M-MF 50-60	134,00
GID50M-MF 63-60	136,00
GID50M-MF 80-70	140,00

Werkzeugaufnahmen/ *Adapter* (ABS®, Mod-Flex, WFU®)

Shaft DIN 69871
Form B

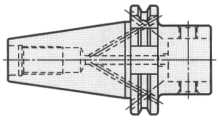

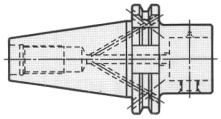

ABS®	**EURO**
GID40M-ABS 25-50.C	218,00
GID40M-ABS 32-50.C	218,00
GID40M-ABS 40-50.C	218,00
GID40M-ABS 50-50.C	218,00
GID40M-ABS 63-90.C	221,00
GID50M-ABS 32-60.C	250,00
GID50M-ABS 40-60.C	250,00
GID50M-ABS 50-60.C	250,00
GID50M-ABS 63-60.C	253,00
GID50M-ABS 80-70.C	258,00

Mod-Flex	**EURO**
GID40M-MF 25-50.C	131,00
GID40M-MF 32-50.C	131,00
GID40M-MF 40-50.C	131,00
GID40M-MF 50-50.C	131,00
GID40M-MF 63-90.C	133,00
GID50M-MF 32-60.C	150,00
GID50M-MF 40-60.C	150,00
GID50M-MF 50-60.C	150,00
GID50M-MF 63-60.C	152,00
GID50M-MF 80-70.C	155,00

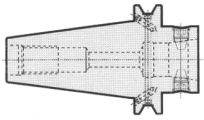

WFU®	**EURO**
GID40M-WFU 24-40.C	112,00
GID40M-WFU 32-40.C	112,00
GID40M-WFU 40-40.C	112,00
GID40M-WFU 50-45.C	112,00
GID40M-WFU 63-65.C	115,00
GID50M-WFU 32-40.C	136,00
GID50M-WFU 40-40.C	136,00
GID50M-WFU 50-45.C	136,00
GID50M-WFU 63-45.C	138,00
GID50M-WFU 80-55.C	144,00

Werkzeugaufnahmen/ *Adapter* (ABS®, Mod-Flex, WFU®)

Shaft Japan Norm BT

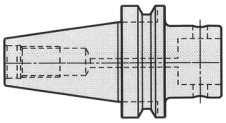

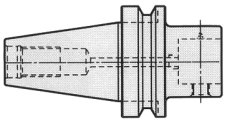

ABS®	EURO
GBT40M-ABS 25-60	198,00
GBT40M-ABS 32-60	198,00
GBT40M-ABS 40-60	198,00
GBT40M-ABS 50-60	198,00
GBT40M-ABS 63-70	201,00
GBT50M-ABS 32-70	226,00
GBT50M-ABS 40-70	226,00
GBT50M-ABS 50-70	226,00
GBT50M-ABS 63-80	230,00
GBT50M-ABS 80-100	233,00

Mod-Flex	EURO
GBT40M-MF 25-60	119,00
GBT40M-MF 32-60	119,00
GBT40M-MF 40-60	119,00
GBT40M-MF 50-60	119,00
GBT40M-MF 63-70	121,00
GBT50M-MF 32-70	136,00
GBT50M-MF 40-70	136,00
GBT50M-MF 50-70	136,00
GBT50M-MF 63-80	138,00
GBT50M-MF 80-100	140,00

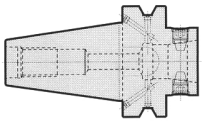

WFU®	EURO
GBT40M-WFU 24-45.C	112,00
GBT40M-WFU 32-45.C	112,00
GBT40M-WFU 40-45.C	112,00
GBT40M-WFU 50-50.C	112,00
GBT40M-WFU 63-60.C	115,00
GBT50M-WFU 24-45.C	136,00
GBT50M-WFU 32-45.C	136,00
GBT50M-WFU 40-55.C	136,00
GBT50M-WFU 50-65.C	136,00
GBT50M-WFU 63-70.C	138,00
GBT50M-WFU 80-70.C	144,00

Verlängerungen/ *Extension* (ABS®, Mod-Flex, WFU®)

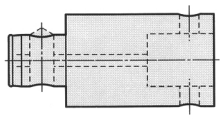

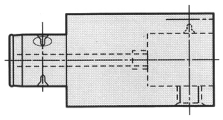

ABS®	EURO
V-ABS 25-40	129,00
V-ABS 25-80	142,00
V-ABS 32-50	136,00
V-ABS 32-80	140,00
V-ABS 40-60	143,00
V-ABS 40-100	149,00
V-ABS 50-80	159,00
V-ABS 50-120	175,00
V-ABS 63-60	179,00
V-ABS 63-100	186,00
V-ABS 63-160	201,00
V-ABS 80-60	212,00
V-ABS 80-100	219,00
V-ABS 80-160	242,00

Mod-Flex	EURO
V-MF 25-40	81,00
V-MF 25-80	90,00
V-MF 32-50	86,00
V-MF 32-80	88,00
V-MF 40-60	90,00
V-MF 40-100	94,00
V-MF 50-80	100,00
V-MF 50-120	110,00
V-MF 63-60	113,00
V-MF 63-100	117,00
V-MF 63-160	127,00
V-MF 80-60	134,00
V-MF 80-100	138,00
V-MF 80-160	153,00

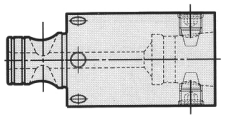

WFU®	EURO
V-WFU 24-40	105,00
V-WFU 24-80	110,00
V-WFU 32-50	105,00
V-WFU 32-80	110,00
V-WFU 40-50	109,00
V-WFU 40-100	112,00
V-WFU 50-50	112,00
V-WFU 50-100	120,00
V-WFU 63-60	115,00
V-WFU 63-100	125,00
V-WFU 80-60	121,00
V-WFU 80-100	133,00

Reduzierungen/ *Reducer* (ABS®, Mod-Flex, WFU®)

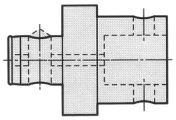

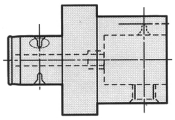

ABS®	EURO
R-ABS 32-25-30	145,00
R-ABS 40-25-40	153,00
R-ABS 40-32-40	153,00
R-ABS 50-25-40	168,00
R-ABS 50-32-40	168,00
R-ABS 50-40-40	169,00
R-ABS 63-40-60	186,00
R-ABS 63-50-60	186,00
R-ABS 80-50-60	221,00
R-ABS 80-63-60	222,00

R-ABS80-ADE3282-40	248,00

Mod-Flex	EURO
R-MF 32-25-30	91,00
R-MF 40-25-40	96,00
R-MF 40-32-40	96,00
R-MF 50-25-40	106,00
R-MF 50-32-40	106,00
R-MF 50-40-40	106,00
R-MF 63-40-60	117,00
R-MF 63-50-60	117,00
R-MF 80-50-60	139,00
R-MF 80-63-60	140,00

R-MF80-ADE3282-40	156,00

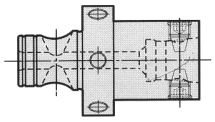

WFU®	EURO
R-WFU 32-24-35	115,00
R-WFU 40-24-35	115,00
R-WFU 40-32-35	115,00
R-WFU 50-24-35	115,00
R-WFU 50-32-35	115,00
R-WFU 50-40-35	111,00
R-WFU 63-40-35	113,00
R-WFU 63-40-85	125,00
R-WFU 63-50-40	115,00
R-WFU 80-50-50	121,00
R-WFU 80-50-100	135,00
R-WFU 80-63-50	121,00

R-WFU80-ADE3282-40	181,00

TWINBORE Zweischneider/ *TWINBORE 2-Blade Boring Heads* (ABS®, Mod-Flex, WFU®)

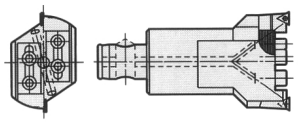

ABS®	EURO
MTP - 28-100-ABS 25	379,00
MTP - 36-100-ABS 32	388,00
MTP - 50-100-ABS 40	406,00
MTP - 78-100-ABS 50	432,00
MTP - 105-100-ABS 63	478,00
MTP - 135-100-ABS 30	558,00
MTP - 190-100-ABS 80	690,00
MTP - 245-100-ABS 80	989,00
MTP - 300-100-ABS 80	1.266,00

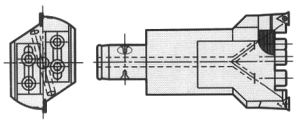

Mod-Flex	EURO
MTP - 28-100-MF 25	265,00
MTP - 36-100-MF 32	272,00
MTP - 50-100-MF 40	284,00
MTP - 78-100-MF 50	302,00
MTP - 105-100-MF 63	335,00
MTP - 135-100-MF 30	391,00
MTP - 190-100-MF 80	483,00
MTP - 245-100-MF 80	692,00
MTP - 300-100-MF 80	886,00

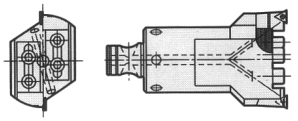

WFU®	EURO
MTP - 28-100-WFU 24	303,00
MTP - 36-100-WFU 32	310,00
MTP - 50-100-WFU 40	325,00
MTP - 78-100-WFU 50	346,00
MTP - 105-100-WFU 80	382,00
MTP - 135-100-WFU 80	446,00
MTP - 190-100-WFU 80	552,00
MTP - 245-100-WFU 80	791,00
MTP - 300-100-WFU 80	1.013,00

TRIBORE Dreischneider/ *TRIBORE 3-Blade Boring Heads* (ABS®, Mod-Flex, WFU®)

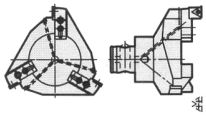

ABS®	EURO
MDP - 48-100-ABS 32	591,00
MDP - 56-100-ABS 40	603,00
MDP - 64-100-ABS 40	625,00
MDP - 78-100-ABS 50	655,00
MDP - 100-100-ABS 63	700,00
MDP - 125-100-ABS 30	759,00
MDP - 155-100-ABS 80	820,00
MDP - 185-100-ABS 80	865,00
MDP - 215-100-ABS 80	956,00

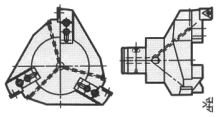

Mod-Flex	EURO
MDP - 48-100-MF 40	414,00
MDP - 56-100-MF 50	422,00
MDP - 64-100-MF 63	438,00
MDP - 78-100-MF 63	469,00
MDP - 100-100-MF 80	490,00
MDP - 125-100-MF 80	531,00
MDP - 155-100-MF 80	574,00
MDP - 185-100-MF 80	606,00
MDP - 215-100-MF 80	669,00

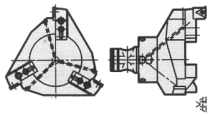

WFU®	EURO
MDP - 48-100-WFU 40	473,00
MDP - 56-100-WFU 50	482,00
MDP - 64-100-WFU 63	500,00
MDP - 78-100-WFU 63	524,00
MDP - 100-100-WFU 80	560,00
MDP - 125-100-WFU 80	607,00
MDP - 155-100-WFU 80	656,00
MDP - 185-100-WFU 80	692,00
MDP - 215-100-WFU 80	765,00

TWINBORE Zweischneider/ *TWINBORE 2-Blade Boring Heads*

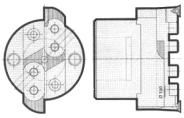

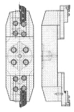

	EURO
MTP-190-120	848,00
MTP-245-120	942,00
MTP-300-125	1.171,00

	EURO
MTP-355-160*	616,00
MTP-520-160*	1.613,00
MTP-685-160*	1.824,00
MTP-850-160*	2.066,00

* In obigen Preisen sind die Werkzeugkassetten nicht enthalten. TWINBORE - Schneidenträger müssen separat bestellt werden.

TRIBORE Dreischneider/ *TRIBORE 3-Blade Boring Heads*

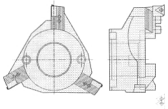

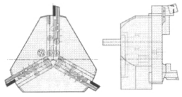

	EURO
MTP-215-100	916,00
MTP-245-100	1.178,00
MTP-300-100	1.501,00

	EURO
MDP-355-160*	1.571,00
MDP-520-160*	1.959,00
MDP-685-185*	2.198,00
MDP-850-185*	2.962,00

* In obigen Preisen sind die Werkzeugkassetten nicht enthalten. TRIBORE - Schneidenträger müssen separat bestellt werden.

Werkzeugaufnahmen/ *Adapter DIN 2202*

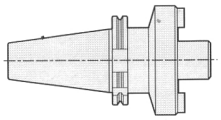

	EURO
GID 50M-MA 60-70	140,00
GBT 50M-MA 60-80	140,00
HSK A100-MA 60-80	154,00

Werkzeugkassetten/ *Cassette*

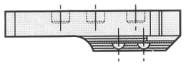

	EURO
MTP-355-25.02	232,00

Schneidenträger/ *Insert Holders*

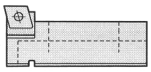

	EURO
MTP - 28-1CC	112,00
MTP - 28-107CC	112,00
MTP - 28-107CC10	112,00
MTP - 28-1TL	112,00
MTP - 28-107TL	112,00
MTP - 28-1TC15	112,00
MTP - 28-1EV	112,00
MTP - 28-107EV	112,00
MTP - 28-1EV10	112,00
MTP - 36-1CC	114,00
MTP - 36-107CC	114,00
MTP - 36-107CC10	114,00
MTP - 36-1TL	114,00
MTP - 36-107TL	114,00
MTP - 36-1TC15	114,00
MTP - 36-1EV	114,00
MTP - 36-107EV	114,00
MTP - 36-1EV10	114,00
MTP - 50-1CC	130,00
MTP - 50-107CC	130,00
MTP - 50-107CC10	130,00
MTP - 50-1TL	130,00
MTP - 50-1VL	130,00
MTP - 50-1TC	130,00
MTP - 50-107TC	130,00
MTP - 50-1TC15	130,00
MTP - 50-1SC10	130,00
MTP - 50-1EV	130,00
MTP - 50-107EV	130,00
MTP - 50-1SV10	130,00

	EURO
MTP - 75-1CC	152,00
MTP - 75-107CC	152,00
MTP - 75-107CC10	152,00
MTP - 75-1TL	152,00
MTP - 75-1VL	152,00
MTP - 75-1TC	152,00
MTP - 75-107TC	152,00
MTP - 75-1TC15	152,00
MTP - 75-1SC10	152,00
MTP - 75-1EV	152,00
MTP - 75-107EV	152,00
MTP - 75-1SV10	152,00
MTP - 135-1TL	178,00
MTP - 135-107TL	178,00
MTP - 135-1VL	178,00
MTP - 135-1TC	178,00
MTP - 135-107TC	178,00
MTP - 135-1TC15	178,00
MTP - 135-1SC10	178,00
MTP - 135-1EV	178,00
MTP - 135-107EV	178,00
MTP - 28-1SC	126,00
MTP - 36-1SC	130,00
MTP - 50-1SC	144,00
MTP - 75-1SC	166,00
MTP - 135-1SC	192,00
MTP - 75-M032	255,00
MTP - 135-M052	322,00

Feinbohrstangen/ *Fine Boring Bars* (ABS®, Mod-Flex, WFU®)

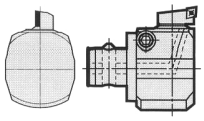

ABS®	EURO
GA 23A-60-ABS 25	323,00
GA 27A-60-ABS 25	298,00
GA 36A-60-ABS 32	342,00
GA 46A-60-ABS 40	372,00
GA 53A-60-ABS 40	372,00
GA 67A-60-ABS 50	408,00
GA 93A-60-ABS 63	467,00
GA 131A-60-ABS 63	541,00
GA 169A-60-ABS 63	648,00
GA 188A-60-ABS 63	715,00

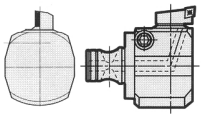

Mod-Flex	EURO
GA 23A-60-MF 25	258,00
GA 27A-60-MF 25	238,00
GA 36A-60-MF 32	278,00
GA 46A-60-MF 40	298,00
GA 53A-60-MF 40	298,00
GA 67A-60-MF 50	326,00
GA 93A-60-MF 63	374,00
GA 131A-60-MF 63	433,00
GA 169A-60-MF 63	518,00
GA 188A-60-MF 63	572,00

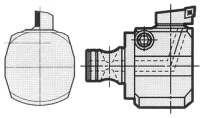

WFU®	EURO
GA 23A-60-WFU 24	291,00
GA 27A-60-WFU 24	268,00
GA 36A-60-WFU 32	308,00
GA 46A-60-WFU 40	335,00
GA 53A-60-WFU 40	335,00
GA 67A-60-WFU 50	367,00
GA 93A-60-WFU 63	420,00
GA 131A-60-WFU 63	487,00
GA 169A-60-WFU 63	583,00
GA 188A-60-WFU 63	644,00

Bohrstangen/ *Boring Bars* (ABS®, Mod-Flex, WFU®)

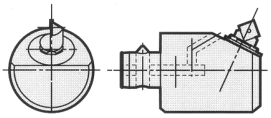

ABS®	EURO
MB 21B-60-ABS 25	241,00
MB 28B-60-ABS 25	221,00
MB 37B-60-ABS 32	246,00
MB 46B-60-ABS 40	258,00
MB 65B-60-ABS 50	287,00
MB 88A-60-ABS 63	331,00
MB 115A-60-ABS 63	375,00
MB 142A-60-ABS 63	433,00
MB 169A-60-ABS 63	506,00
MB 196A-60-ABS 63	586,00

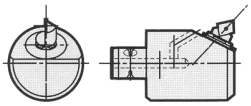

Mod-Flex	EURO
MB 21B-60-MF 25	193,00
MB 28B-60-MF 25	177,00
MB 37B-60-MF 32	197,00
MB 46B-60-MF 40	206,00
MB 65B-60-MF 50	230,00
MB 88A-60-MF 63	365,00
MB 115A-60-MF 63	300,00
MB 142A-60-MF 63	346,00
MB 169A-60-MF 63	405,00
MB 196A-60-MF 63	469,00

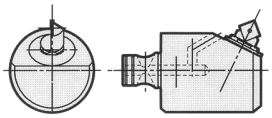

WFU®	EURO
MB 21B-60-WFU 24	217,00
MB 28B-60-WFU 24	199,00
MB 37B-60-WFU 32	221,00
MB 46B-60-WFU 40	232,00
MB 65B-60-WFU 50	258,00
MB 88A-60-WFU 63	298,00
MB 115A-60-WFU 63	338,00
MB 142A-60-WFU 63	390,00
MB 169A-60-WFU 63	455,00
MB 196A-60-WFU 63	527,00

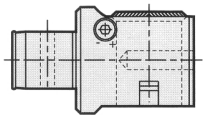

	EURO
MGAG-05-ABS 50	909,00
MGAG-07-ABS 63	1.114,00
MGAG-05-MF 50	727,00
MGAG-07-MF 63	891,00
MGAG-05-WFU 50	818,00
MGAG-07-WFU 63	1.003,00

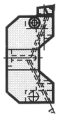

	EURO
GA 207A-100-ADE 32	708,00
GA 245A-100-ADE 32	814,00
GA 283A-100-ADE 32	851,00
GA 321A-100-ADE 32	951,00

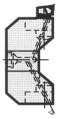

	EURO
MB 215A-60-ADE 32	581,00
MB 253A-60-ADE 32	688,00
MB 291A-60-ADE 32	726,00
MB 329A-60-ADE 32	826,00

Bohrstangen/ *Boring Bars*

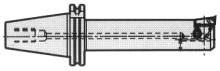

	EURO
GID40M-GA23A-130	369,00
GID40M-GA27A-130	365,00
GID40M-GA36A-150	380,00
GID40M-GA46A-160	411,00
GID40M-GA53A-160	411,00
GID40M-GA67A-180	448,00
GID40M-GA93A-140	485,00
GID40M-GA23A-130	438,00
GID40M-GA27A-130	424,00
GID40M-GA36A-150	431,00
GID40M-GA46A-160	448,00
GID40M-GA53A-160	448,00
GID40M-GA67A-180	475,00
GID40M-GA93A-180	518,00

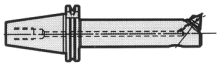

	EURO
GID40M-MB21B-130	284,00
GID40M-MB28B-130	284,00
GID40M-MB37B-150	305,00
GID40M-MB46B-160	317,00
GID40M-MB65B-160	329,00
GID50M-MB21B-130	338,00
GID50M-MB28B-130	338,00
GID50M-MB37B-150	359,00
GID50M-MB46B-160	368,00
GID50M-MB65B-180	379,00

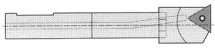

	EURO
AS10-03-01	28,10
AS10-05-01	28,40
AS10-07-01	30,80
ASH10-08-02T06	171,00
ASH10-11-03T06	171,00
ASH10-14-03T11	174,00
ASH10-17-03T11	178,00
ASH10-20-03T11	182,00
ASH10-23-03T11	199,00
AS16-12-03T06	125,00
AS16-17-03T11	135,00
AS16-22-03T11	151,00
AS16-27-03T11	159,00
AS16-32-03T11	165,00
ASH16-12-03T06	290,00
ASH16-17-03T11	301,00
ASH16-22-03T11	307,00
ASH16-27-03T11	312,00
ASH16-32-03T11	318,00

Fasringe/ *Chamfer Rings*

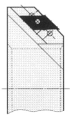

	EURO
FRG-2045-01	78,10
FRG-2545-01	78,10
FRG-3245-01	81,90
FRG-4045-01	95,50
FRG-5045-01	99,30
FRG-6345-01	112,00

Bohrstangen/ *Boring Bars*

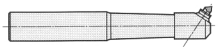

	EURO
ZS20K-51	190,00
ZS20K-52	190,00
ZS20K-53	190,00
ZS20K-54	201,00
ZS20K-55	220,00

GA Feinbohreinheiten/ *GA Fine Boring Units*

	EURO
M022-BS095-T06-50GA	214,00
M022-0L095-T06-50GA	214,00
M032-0L095-T06-50GA	214,00
M052-BS095-TC-50GA	245,00
M052-0L095-TC-50GA	245,00
M052-1L095-TC-50GA	245,00
M072-0L095-TC-100GA	282,00
M072-0L095-TC-100	242,00

Frontbuchsen/ *Frontbushings*

	EURO
SFB-GA2	145,00
SFB-GA3	157,00
SFB-GA5	181,00
SFB-GA7	220,00

	EURO
2011	58,00
3011	61,30
5011	69,50
7011	80,90
10011	104,00
2012	58,00
3012	61,30
5012	69,50
7012	80,90
10012	104,00
2611	80,30
3611	82,40
5611	92,70
7611	111,00
10611	141,00
2612	80,30
3612	82,40
5612	92,70
7612	111,00
10612	141,00

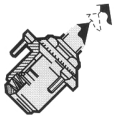

	EURO
C-WFB 2611	92,20
C-WFB 3611	94,50
C-WFB 5611	107,00
C-WFB 7611	118,00
C-SFB 2611	92,20
C-SFB 3611	94,50
C-SFB 5611	107,00
C-SFB 7611	118,00

Feinbohreinheitenen/ *Fine Boring Units*

SUCO Ersatzpatronen (gelötete Ausführung)/
SUCO Replacement cartridges (brazed version)

Patronen/ *Cartridges*

Bestell-Nr./ *Order no.*		**Stück/** *Piece* (EURO)		
		1 - 11	12 - 23	24 - 47
M1A2	M1A2412			
M1B212	M1B2412			
M1A212	M1A24	33,00	32,20	31,30
M1B212	M1B24			
M2A2	M2A2412			
M2B212	M2B2412			
M2A212	M2A2L12			
M2B212	M2B2L12			
M2A2L	M2A24	36,10	35,20	34,40
M2B2L	M2B24			
M3A2	M3A2412			
M3B212	M3B2412			
M3A212	M3A2L12			
M3B212	M3B2L12			
M3A2L	M3A24	40,40	39,20	38,60
M3B2L	M3B24			

Einheiten/ *Units*

Bestell-Nr./ *Order no.*		**Stück/** *Piece* (EURO)	
		1 - 11	12 - 23
M1A2	M1A2412		
M1B212	M1B2412		
M1A212	M1A24	45,50	44,70
M1B212	M1B24		
M2A2	M2A2412		
M2B212	M2B2412		
M2A212	M2A2L12		
M2B212	M2B2L12		
M2A2L	M2A24	53,50	52,60
M2B2L	M2B24		
M3A2	M3A2412		
M3B212	M3B2412		
M3A212	M3A2L12		
M3B212	M3B2L12		
M3A2L	M3A24	59,70	58,50
M3B2L	M3B24		

Feinbohreinheitenen/ *Fine Boring Units*

SUCO Ersatzpatronen (zur Aufnahme von Wendeplatten)/
SUCO Replacement cartridges (for indexable inserts)

Patronen/ *Cartridges*

Bestell-Nr./ *Order no.*				**Stück/** *Piece* (EURO) 1 - 11		12 - 23
M2B2-E04	M2A2-E04	z.B. M2B2-E04		124,00		121,00
M3A2						
M3B2						
M3A2L		V	z.B. M3A2V	124,00		121,00
M3B2L		CC	z.B. M3A2C06	119,00		114,00
		V	z.B. M5B2V	124,00		121,00
		CC	z.B. M5B2C06	121,00		115,00
		TC	z.B. M5B2TC	121,00		115,00
		V	z.B. M7A2V	171,00		168,00
		CC	z.B. M7A2C06	169,00		163,00
		TC	z.B. M7A2TC	169,00		163,00
		V	z.B. M10A2V	192,00		188,00
		CC	z.B. M10A2C12	188,00		183,00
		TC	z.B. M10A2TC	188,00		183,00

Einheiten/ *Units*

Bestell-Nr./ *Order no.*				**Stück/** *Piece* (EURO) 24 - 47	
M2B2-E04	M2A2-E04	z.B. M2B2-E04		141,40	
M3A2					
M3B2					
M3A2L		V	z.B. M3A2V	143,30	
M3B2L		CC	z.B. M3A2C06	138,30	
		V	z.B. M5B2V	147,00	
		CC	z.B. M5B2C06	144,00	
		TC	z.B. M5B2TC	144,00	
		V	z.B. M7A2V	168,00	
		CC	z.B. M7A2C06	163,00	
		TC	z.B. M7A2TC	163,00	
		V	z.B. M10A2V	188,00	
		CC	z.B. M10A2C12	183,00	
		TC	z.B. M10A2TC	183,00	

Ersatzteile, Zubehör/ *Spare parts, Accessories*

Schnecken/ *Worm Screw*

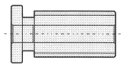

	EURO
NR.2821(F.GR.M02)	46,60
NR.3821(F.GR.M02)	53,40
NR.5821(F.GR.M02)	60,30
NR.7821(F.GR.M02)	67,30

Befestigungsschraube/ *Insert Screw*

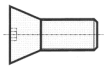

	EURO
A-5016	3,10
C02505	4,90
C02506	4,90
C04008	5,20
C05012	4,90
D-4008	3,00
D-4010	3,00
D-4011	3,00
D-4012	3,00
F2004T	2,30
CSTB2	2,10

Doppelgabelschlüssel/ *Spanner*

	EURO
DS-1	6,10
DS-2	6,10
DS-3	6,40
DS-5	8,80
DS-7-10	12,10

Spares-Schlüssel/ *Torque key*

	EURO
G02	8,80
SKSS-2	0,30
SKSS-2,5	0,30
SKSS-4	0,30
SKSS-6	0,90
SKSS-8	1,60
TX-6	7,20
TX-7	7,20
TX-8	7,20
TX-15	8,70

Ersatzteile, Zubehör/ *Spare parts, Accessories*

Verstellschlüssel/ *Wrench*

	EURO
MGAG-03	17,00
MGAG-05	17,00

Verstellschlüssel/ *Screw*

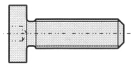

	EURO
MTP-28-2	7,50
MTP-50-2	7,50
MTP-135-2	7,50

Federscheibe/ *Spring Washer*

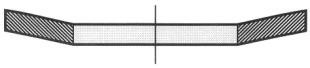

	EURO
MTP-28-15	0,90
MTP-36-15	1,40
MTP-50-15	0,50
MTP-75-15	0,70
MTP-135-15	0,70

Klemmbolzen/ *Insert Screw*

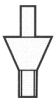

	EURO
NLM-12.7/NLM46	17,40
NLM-19./NLM68	23,30
NLM-6.5/NLM23	16,60
NLM-9.525/NLM33	16,80
NLM-9.525/NLM34L	16,60

Ersatzteile, Zubehör/ *Spare parts, Accessories*

Skalenkonen/ *Dial*

	EURO
SK1-40	12,30
SK1-50	12,30
SK2-40	12,80
SK2-50	12,80
SK3-40	14,80
SK3-50	14,80
SK5-40	17,60
SK5-50	17,60
SK7-80	24,50
SK7-100	24,50
SK10-80	32,80
SK10-100	32,80

GA Skalenkonen/ *GA Dial*

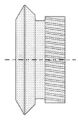

	EURO
5855	59,60
7860	66,70

Gegenhalterringe/ *Spring disc*

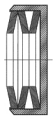

	EURO
CB 8x3.2x0.5	4,40
CB 10x4.2x0.6	4,10
GRE05	4,20
GRE07	5,20
GRE10	6,60

Anzugsschrauben/ *Allen Screw*

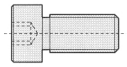

	EURO
M3	0,20
M4	0,40
M6	1,20
M10	1,70
M12	2,40

Ersatzteile, Zubehör/ *Spare parts, Accessories*

Unterlegplatte/ *Shim*

	EURO
SSn-120408	12,30
SSn-190408	21,30
TSN-160308/12	9,10
TSN-220408	15,20
T23.19-621	12,60

Klemmschraube/ *Insert Screw*

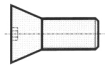

	EURO
TXS M2x4	2,70
214.80.800	3,10
5513-020-01	3,10
5513-020-03	3,10
5513-020-17	6,40
5513-020-27	3,90

ABS® Schraube und Stift/ *ABS® Screw and pin*

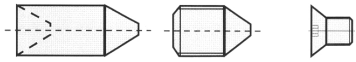

	EURO
Ersatzteile für Hülsen	
ABS 25-FS-W	26,10
ABS 32-FS-W	26,10
ABS 40-FS-W	27,70
ABS 50-FS-W	32,00
ABS 63-FS-W	34,00
ABS 80-FS-W	37,30
ABS 100-FS-W	41,00
Ersatzteile für Zapfen	
ABS 25-ES-M	31,90
ABS 32-ES-M	38,80
ABS 40-ES-M	38,80
ABS 50-ES-M	43,70
ABS 63-ES-M	45,70
ABS 80-ES-M	46,80
ABS 100-ES-M	51,60

Mod-Flex Schraube/ *Mod- Flex Screw*

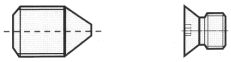

Größe/ *Size*	*Locking Screw*	EURO
Ersatzteile für Zapfen (2 Screw)		
025	025 MF 270001	12,80
032	032 MF 270002	12,80
040	040 MF 270003	12,80
050	050 MF 270004	12,80
063	063 MF 270005	13,90
080	080 MF 270006	15,70
100	100 MF 270007	21,20
Ersatzteile für Hülsen		
025	025 MF 270188	7,50
032	032 MF 270189	7,50
040	040 MF 270190	8,40
050	050 MF 270191	8,40
063	063 MF 270192	8,40
080	080 MF 270193	12,25
100	100 MF 270194	14,70

WFU® Wuchtset* aus Stahl/ **WG30**
Set steel elements for balancing*

Größe/ *Size*	**Bestell-Nr./** *Order no.*	**EURO**
WFU 40-25	WFU-WUCHTSET M6/M3 STA	18,00
WFU 40-26	WFU-WUCHTSET M8/M4 STA	20,00
WFU 40-27	WFU-WUCHTSET M10/M5 STA	22,00
WFU 40-28	WFU-WUCHTSET M10/M5 STA	22,00

WFU® Wuchtset* aus Aluminium/ **WG30**
Set of Aluminium elements for balancing*

Größe/ *Size*	**Bestell-Nr./** *Order no.*	**EURO**
WFU 40-25	WFU-WUCHTSET M6/M3 ALU	18,00
WFU 50-32	WFU-WUCHTSET M8/M4 ALU	20,00
WFU 63-40	WFU-WUCHTSET M10/M5 ALU	22,00
WFU 80-40	WFU-WUCHTSET M10/M5 ALU	22,00

* Zum Gebrauchsmuster in Deutschland angemeldet/ Registered design in Germany.

WFU® Ersatzteile, Zubehör/ *WFU® Spare parts, Accessories*

Verwendung: Universellen Feinwuchten mit WF-Wuchtelementen* an allen WFU Adaptern einfach und beliebig oft möglich./
Application: Universal balancing with WF balancing elements is simple and can be carried out as often as required.*

		Wuchtschraube/ *Screw for balancing*		**Sicherungsstifte** *Locking pin*	
Bestell-Nr./ *Order no.*	**Inhalt (Stück)/** *Content (piece)*	Stück/ *Piece*	Größe/ *Size*	Stück/ *Piece*	Größe/ *Size*
WFU-WUCHTSET M6/M3	32	6	M6 x 6	6	M3 x 10 - DIN914
				6	M3 x 12 - DIN914
				6	M3 x 14 - DIN914
				6	M3 x 16 - DIN914
WFU-WUCHTSET M8/M4	26	6	M8 x 7.5	6	M4 x 10 - DIN914
				6	M4 x 14 - DIN914
				6	M4 x 16 - DIN914
WFU-WUCHTSET M10/M5	26	6	M10 x 8	6	M5 x 14 - DIN914
				6	M5 x 18 - DIN914
				6	M5 x 25 - DIN914

		Bediendungsschlüssel *Service key*	
Bestell-Nr./ *Order no.*	**Inhalt (Stück)/** *Content (piece)*	Stück/ *Piece*	Typ/ *Type*
WFU-WUCHTSET M6/M3	32	1	Wuchtschlüssel
		1	Große 1
		1	Sechskantschlüssel
			1.5 mm
WFU-WUCHTSET M8/M4	26	1	Wuchtschlüssel
		1	Große 2
		1	Sechskantschlüssel
			2 mm
WFU-WUCHTSET M10/M5	26	1	Wuchtschlüssel
		1	Große 1
		1	Sechskantschlüssel
			2.5 mm

WFU® Kugelgewindestifte/ **WG30**
Threaded taper pins

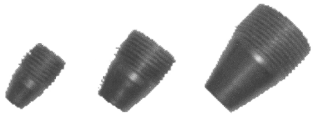

Größe/ *Size*	**Bestell-Nr./** *Order no.*	**EURO**
WFU 40-25	WFU-SCHRAUBE M10 X 1	5,00
WFU 50-32	WFU-SCHRAUBE M14 X 1	5,50
WFU 63-40	WFU-SCHRAUBE M18 X 1	6,00
WFU 80-40	WFU-SCHRAUBE M18 X 1	6,00

SUCO Special Purpose Tools

SUCO Special Purpose Tools

Manufacturing tools is a precision business.
This art is part of our tradition. Our customers also know this. Since our founding in 1962, we deliver our tools exclusive in sintered implementation. Therefore we have great experience which we like to pass on this field.

At the processing of mono- and polycrystalline materials we reach in our grinding department also finest tolerances. Here we measure every blade geometry electronically — approved tools that meet the highest quality standards.

Special-purpose tools designed and manufactured by us.
Besides certified manufacturing tools, we dispose in our company of our own design and build facility as well as the ability to produce due to customer desires. In this way, customer's requirements can be resolved quickly.
The professional advice of course and the thus coherent trials are carried out and demonstrated with us.

Fast, reliable and precise.

We will be pleased to inform you about our comprehensive range of services.
There are no limits for your and our ideas!

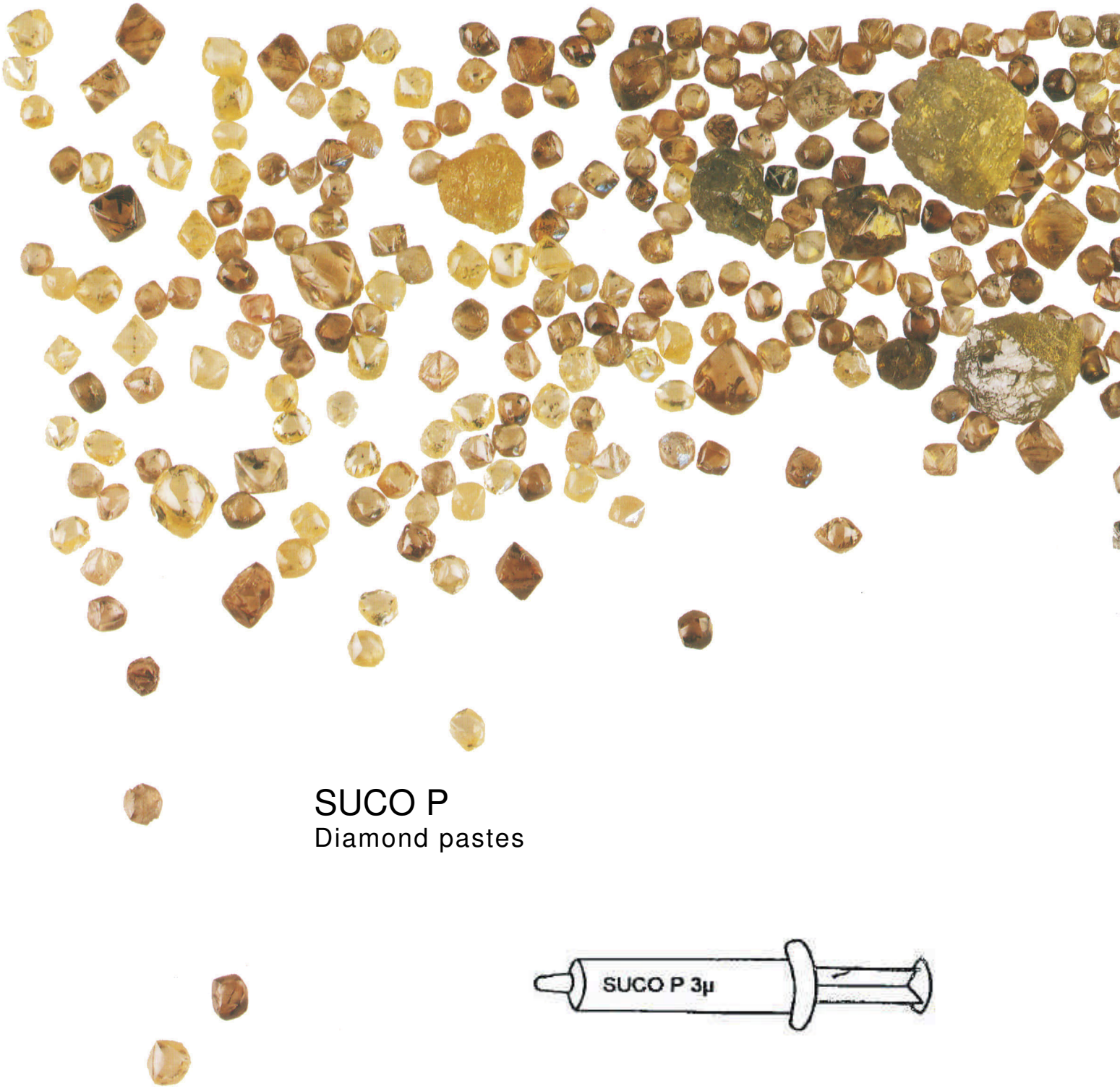

SUCO P

Diamond pastes

16-19/0

SUCO P Diamond pastes

Low-concentration diamond pastes in dosing syringes L

Order-No.	Quantity	Order-No.	Quantity	Grain size	Colour
1001	5 grams	1011	10 grams	0.5 µ	White
1002	5 grams	1012	10 grams	1 µ	Yellow
1003	5 grams	1013	10 grams	3 µ	Green
1004	5 grams	1014	10 grams	7 µ	Red
1005	5 grams	1015	10 grams	15 µ	Blue
1006	5 grams	1016	10 grams	30 µ	Brown
1007	5 grams	1017	10 grams	50 µ	Black

Medium-concentration diamond pastes in dosing syringes M

Order-No.	Quantity	Order-No.	Quantity	Grain size	Colour
2001	5 grams	2011	10 grams	0.5 µ	White
2002	5 grams	2012	10 grams	1 µ	Yellow
2003	5 grams	2013	10 grams	3 µ	Green
2004	5 grams	2014	10 grams	7 µ	Red
2005	5 grams	2015	10 grams	15 µ	Blue
2006	5 grams	2016	10 grams	30 µ	Brown
2007	5 grams	2017	10 grams	50 µ	Black

High-concentration diamond pastes in dosing syringes H

Order-No.	Quantity	Order-No.	Quantity	Grain size	Colour
3001	5 grams	3011	10 grams	0.5 µ	White
3002	5 grams	3012	10 grams	1 µ	Yellow
3003	5 grams	3013	10 grams	3 µ	Green
3004	5 grams	3014	10 grams	7 µ	Red
3005	5 grams	3015	10 grams	15 µ	Blue
3006	5 grams	3016	10 grams	30 µ	Brown
3007	5 grams	3017	10 grams	50 µ	Black

SUCO diluents for diamond pastes

Order-No.	Volume	Type
8300	150 ml	Spray, refillable
8400	1 l	Refill can
8500	5 l	Refill can

Precision tools from BERLIN stand for: QUALITY. — Diamond tools from BERLIN stand for: **SUCO**. In 1962 **SUCO**, short for Schmitz and Company, manufacturer of diamond tools, was founded in Berlin. Due to the high standard of quality of their products **SUCO** quickly succeeded in establishing a good reputation amongst experts. Continuous development of their products, improvement of their quality standards as well as the extansion of their range of products have given **SUCO** a firm position in industry. To maintain and further improve those standards will continue to remain our objective. — Diamond tools always were a matter of confidence. — Rely on us and our competence. We will be happy to pass on our experience to you. **SUCO**: your partner in the diamond tool trade.

SUCO DiamantWerkzeuge
Schmitz u. Co. Produktions GmbH
Hohefeldstraße 35, 13467 Berlin-Hermsdorf GERMANY

Telephone: +49 30 4045057 | Telefax: +49 30 4040641

Email: schmitz@suco-diamonds.de
Online: www.suco-diamonds.de